RADIATION SURVEY WORKSHEET

eXaminer Radiation Survey Information

Airport:	***Philadelphia International Airport***	Scanner Location:	***Baggage Handling Room***	Case#:	**PHL-327905**
Personnel Performing Radiation Survey:	[redacted]			Date Survey Performed:	***10/22/2010***

Scanner Serial Number:		***6100***	**Entrance Tunnel Serial Number:**		***1068A***	**Exit Tunnel Serial Number:**		***5269B***
High Reading:	Average Reading:	Min. Reading:	High Reading:	Average Reading:	Min. Reading:	High Reading:	Average Reading:	Min. Reading:
60	**23.30**	**9**	**166**	**42.55**	**11**	**209**	**43.17**	**12**
Good			**Good**			**Good**		

Radiation Meter:	Type Meter:	**451P**	Meter Serial Number:	**6647**	Calibration Due Date:	***April 21, 2011***

NOTES

Complete Radiation Survey (CRS)	**Record Voltage and Bean Current here:**					
Rename this Document before starting the Survey to:	Voltage:	165	KV	Beam Current:	10.0	mA
PHL-CRS-22OCT2010-6100	**Maximum Safe Readings**	**Scanner**	350	**Tunnels**	350	**Curtains** 350

Step:	Procedure	Expected results
1.	Set Up: Obtain Inovision Ion Chamber Survey Meter and in an area away from the scanners, turn on the meter by pressing the On-Off key. Wait approx. 4 minutes for the meter to run through the initialization procedure.	The GUI will be visible and will indicate Standby. After the radiation meter initialization procedure is complete the meter will be reading less than 20 µR/hr and the meter will be ready for use.
2.	The scanner will be in Standby. Change the conveyor switch on the scanner to Stop. Change the exit tunnel conveyor switch to Off to stop the conveyor.	Both conveyors should be stopped.
3.	On the GUI dropdown screen, select diagnostic, followed by Radiation Survey. A radiation survey window will appear. Click "Turn On" button to turn x-rays on. Turn on x-rays prompt will say "Place survey bag on belt". Place IQTK bag on Entry Conveyor Belt.	A window indicating "Radiation Survey" will appear.
4.	When "Bag in survey position" appears, go to the FCC monitor and select "2" then <Enter>, verify and record the voltage and current in the displayed on the FCC screen in the planks provided above.	The high voltage is between 144KV and 176KV. The current is between 8.8mA and 10.6mA and the scanner X-ray indicator lights are on.
5.	Survey one of the areas indicated by the boxes in Appendix A2. Record the highest reading within the area. Repeat the process until all areas are surveyed and readings are recorded.	As the survey is conducted, the radiation meter indicates the degree of radiation emission.
6.	Review all radiation data sheets for high readings.	Readings shall not exceed 350 uR/hr in any box.
7.	After radiation survey is complete, click on "Start Conveyor" button on the GUI. Click the "Turn Off" button to turn off x-rays. Next click "Done". The IQTK bag will eject from exit tunnel. EDAC will reboot.	IQTK bag is ejected and scanner reboots.
7.	Visually inspect the entrance and exit of the system for X-ray caution hazard signs.	X-ray hazard signs reading "Do not insert any part of the body when system is energized" are posted at entrance and exit of system.
9.	Fill out the eXaminer radiation stickers and place on the eXaminer in accordance with Examiner Technical Bulletin ex253.	Readings shall not exceed 350 uR/hr in any box.

RADIATION SURVEY WORKSHEET

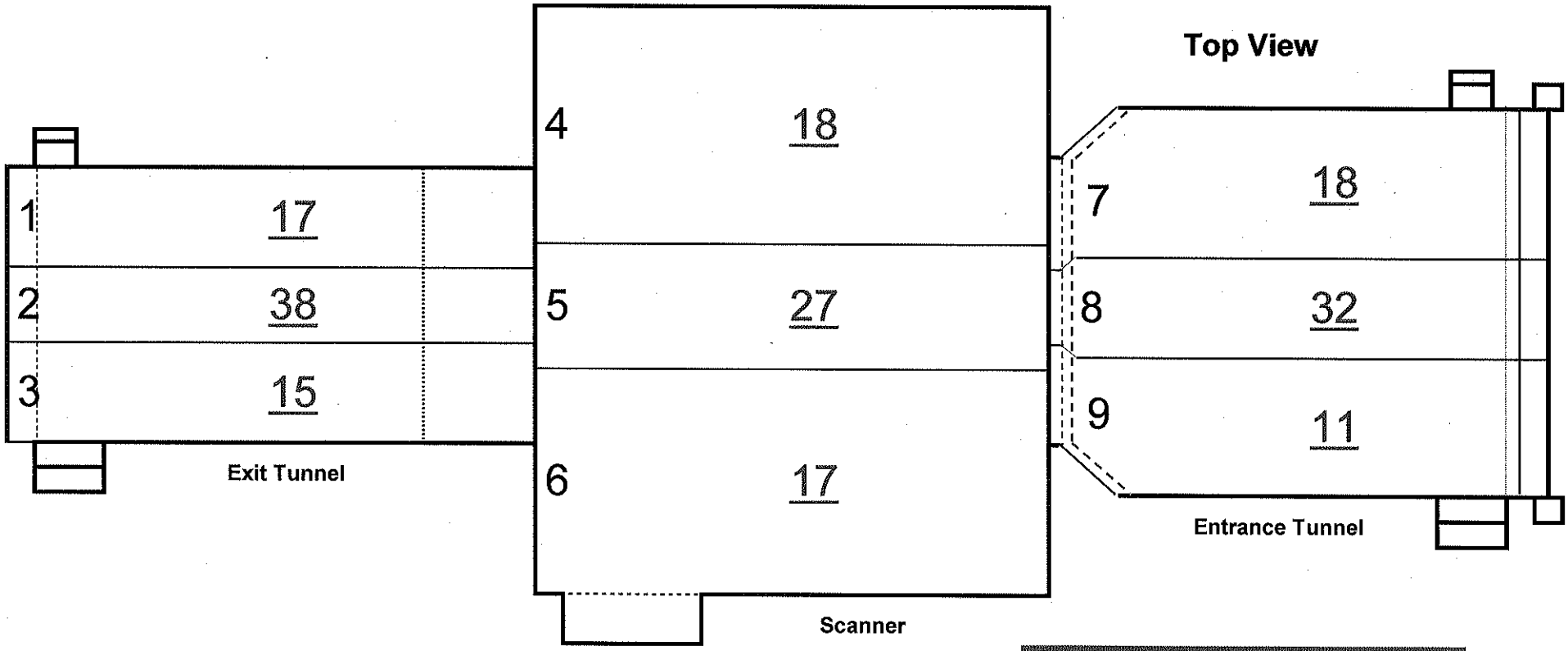

GOOD

Top View			
Scattered Radiation Measurement Points Worksheet			No PROBLEM
Record highest reading per panel		µR/Hr	
1	Exit Conveyor Top Panel	17	
2	Exit Conveyor Top Panel	38	
3	Exit Conveyor Top Panel	15	
4	Scanner Conveyor Top Panel	18	
5	Scanner Conveyor Top Panel	27	
6	Scanner Conveyor Top Panel	17	
7	Entrance Conveyor Top Panel	18	
8	Entrance Conveyor Top Panel	32	
9	Entrance Conveyor Top Panel	11	

Highest Reading	38
Average Reading	21
Lowest Reading	11

RADIATION SURVEY WORKSHEET

SIDE PROFILE VIEW (OPPOSITE AC)

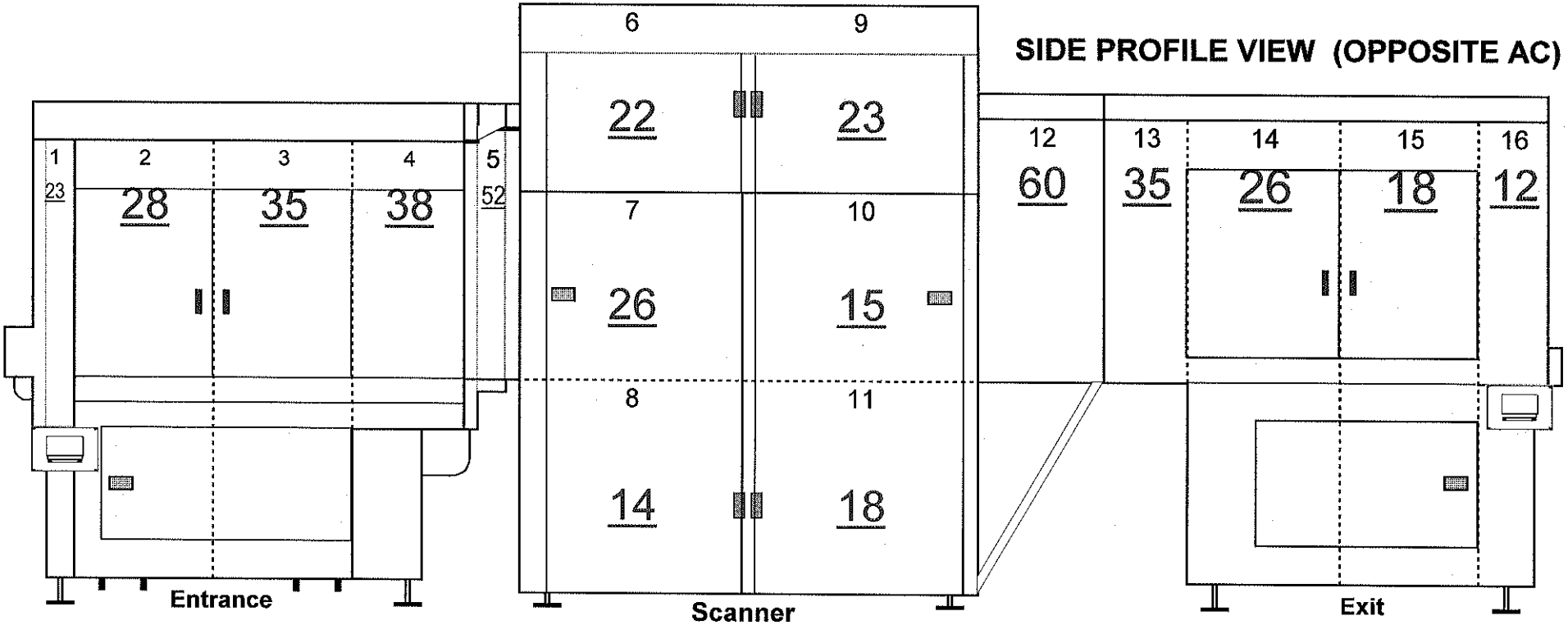

SYSTEM - SIDE PROFILE VIEW (Opposite AC Side)			
Scattered Radiation Measurement Points Worksheet			No PROBLEM
	Record highest reading per panel	µR/Hr	
1	Entrance Conveyor Panel	23	
2	Entrance Conveyor Panel	28	
3	Entrance Conveyor Panel	35	
4	Entrance Conveyor Panel	38	
5	Entrance Conveyor / Scanner Panel	52	
6	Upper Scanner Panel	22	
7	Middle Scanner Panel	26	
8	Lower Scanner Panel	14	
9	Upper Scanner Panel	23	
10	Middle Scanner Panel	15	
11	Lower Scanner Panel	18	
12	Exit Conveyor / Scanner Panel	60	
13	Exit Conveyor Panel	35	
14	Exit Conveyor Panel	26	
15	Exit Conveyor Panel	18	
16	Exit Conveyor Panel	12	

GOOD

Highest Reading	60
Average Reading	28
Low Reading	12

12/28/2010

RADIATION SURVEY WORKSHEET

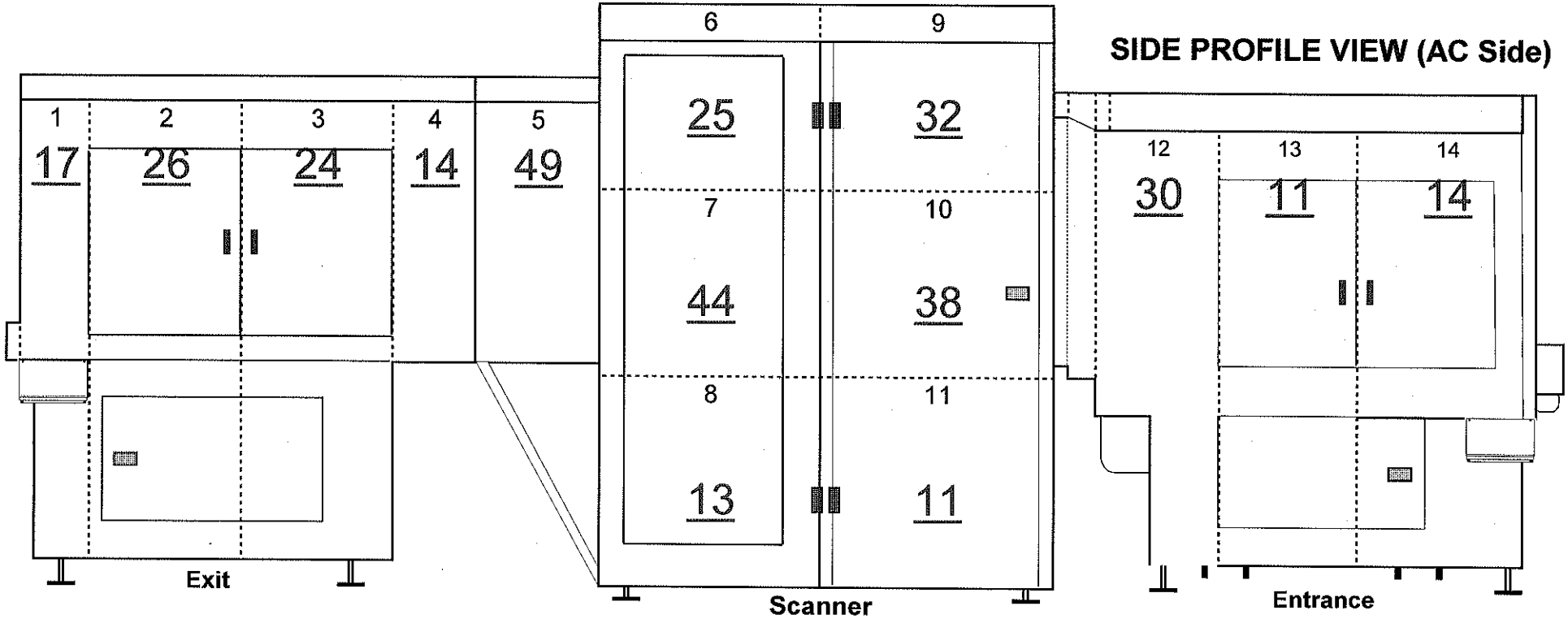

SYSTEM - SIDE PROFILE VIEW (AC Side)			
Scattered Radiation Measurement Points Worksheet			No PROBLEM
Record highest reading per panel		µR/Hr	
1	Exit Conveyor Panel	17	
2	Exit Conveyor Panel	26	
3	Exit Conveyor Panel	24	
4	Exit Conveyor Panel	14	
5	Exit Conveyor / Scanner Panel	49	
6	Upper Scanner Pane	25	
7	Middle Scanner Panel	44	
8	Lower Scanner Panel	13	
9	Upper Scanner Panel	32	
10	Middle Scanner Panel	38	
11	Lower Scanner Panel	11	
12	Entrance Conveyor / Scanner Panel	30	
13	Entrance Conveyor Panel	11	
14	Entrance Conveyor Panel	14	

GOOD

Highest Reading	49
Average Reading	25
Low Reading	11

12/28/2010

RADIATION SURVEY WORKSHEET

SYSTEM - FACES (End Views)

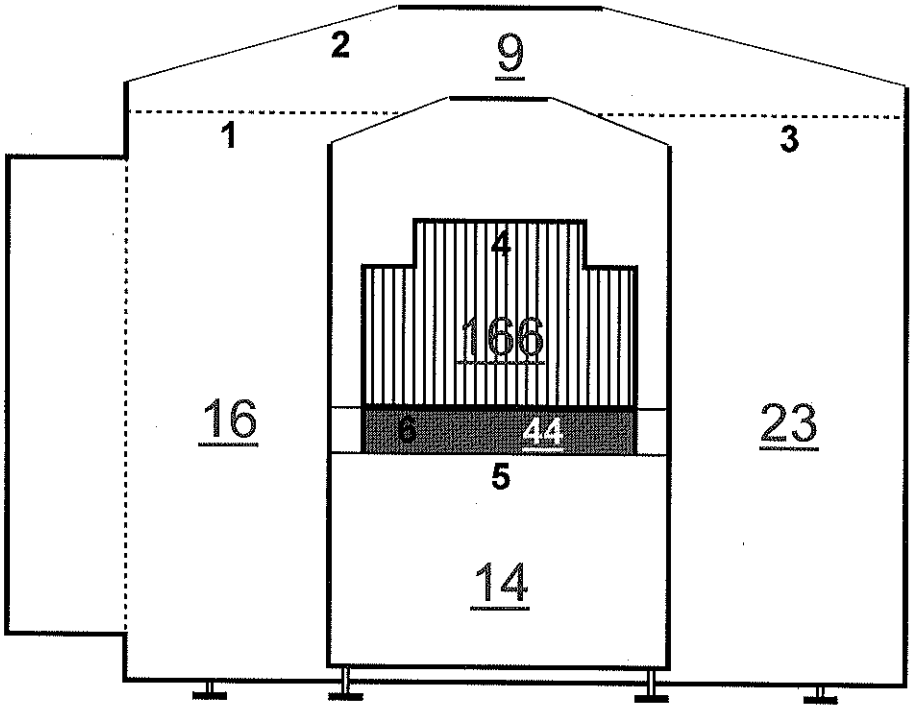

eXaminer entrance

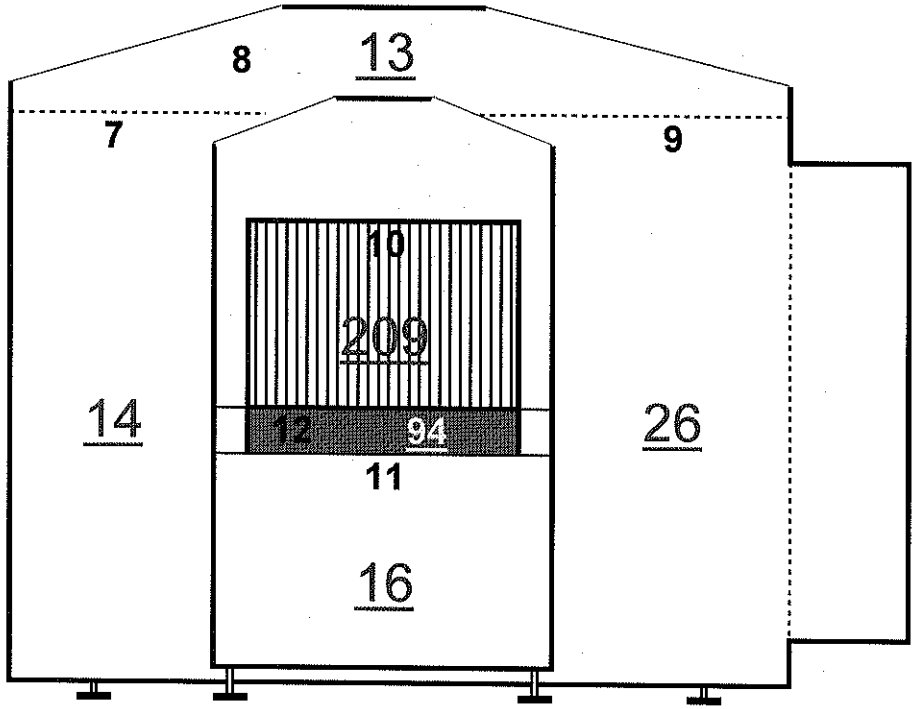

eXaminer exit

SYSTEM - FACES (End Views)			
Scattered Radiation Measurement Points Worksheet			No PROBLEM
	Record highest reading per panel	µR/Hr	
1	Scanner Panel	16	
2	Scanner Top Panel	9	
3	Scanner Panel	23	
4	Belt Entrance	166	
5	Entrance Lower Panel	14	
6	Belt Lower Facia Cover Entrance	44	
7	Scanner Panel	14	
8	Scanner Top Panel	13	
9	Scanner Panel	26	
10	Belt Exit	209	
11	Exit Lower Panel	16	
12	Belt Lower Facia Cover Exit	94	

GOOD

Highest Reading	209
Average Reading	54
Low Reading	9

12/28/2010