RADIATION SURVEY WORKSHEET

eXaminer Radiation Survey Information

Airport:	FLL	Scanner Location:	Cargo	Case#:	FLL-C296670
Personnel Performing Radiation Survey:	[redacted]			Date Survey Performed:	4/13/2010

Scanner Serial Number: 6236			Entrance Tunnel Serial Number: 2283A			Exit Tunnel Serial Number: 2191B		
High Reading:	Average Reading:	Min. Reading:	High Reading:	Average Reading:	Min. Reading:	High Reading:	Average Reading:	Min. Reading:
40	21.40	10	230	52.93	18	103	54.58	15
Good			Good			Good		

Radiation Meter:	Type Meter:	451P	Meter Serial Number:	68	Calibration Due Date:	March 8, 2011

NOTES

Complete Radiation Survey (CRS)	Record Voltage and Bean Current here:					
Rename this Document before starting the Survey to:	Voltage: 165 KV		Beam Current: 9.9 mA			
FLL-CRS-13DEC2010-6236	**Maximum Safe Readings**	**Scanner**	350	**Tunnels**	350	**Curtains** 350

Step:	Procedure	Expected results
1.	Set Up: Obtain Inovision Ion Chamber Survey Meter and in an area away from the scanners, turn on the meter by pressing the On-Off key. Wait approx. 4 minutes for the meter to run through the initialization procedure.	The GUI will be visible and will indicate Standby. After the radiation meter initialization procedure is complete the meter will be reading less than 20 µR/hr and the meter will be ready for use.
2.	The scanner will be in Standby. Change the conveyor switch on the scanner to Stop. Change the exit tunnel conveyor switch to Off to stop the conveyor.	Both conveyors should be stopped.
3.	On the GUI dropdown screen, select diagnostic, followed by Radiation Survey. A radiation survey window will appear. Click "Turn On" button to turn x-rays on. Turn on x-rays prompt will say "Place survey bag on belt". Place IQTK bag on Entry Conveyor Belt.	A window indicating "Radiation Survey" will appear.
4.	When "Bag in survey position" appears, go to the FCC monitor and select "2" then <Enter>, verify and record the voltage and current in the displayed on the FCC screen in the planks provided above.	The high voltage is between 144KV and 176KV. The current is between 8.8mA and 10.6mA and the scanner X-ray indicator lights are on.
5.	Survey one of the areas indicated by the boxes in Appendix A2. Record the highest reading within the area. Repeat the process until all areas are surveyed and readings are recorded.	As the survey is conducted, the radiation meter indicates the degree of radiation emission.
6.	Review all radiation data sheets for high readings.	Readings shall not exceed 350 uR/hr in any box.
7.	After radiation survey is complete, click on "Start Conveyor" button on the GUI. Click the "Turn Off" button to turn off x-rays. Next click "Done". The IQTK bag will eject from exit tunnel. EDAC will reboot.	IQTK bag is ejected and scanner reboots.
7.	Visually inspect the entrance and exit of the system for X-ray caution hazard signs.	X-ray hazard signs reading "Do not insert any part of the body when system is energized" are posted at entrance and exit of system.
9.	Fill out the eXaminer radiation sticker and adhere to to the frame of the eXaminer under door #5 on the left side of the scanner.	Readings shall not exceed 350 uR/hr in any box.

RADIATION SURVEY WORKSHEET

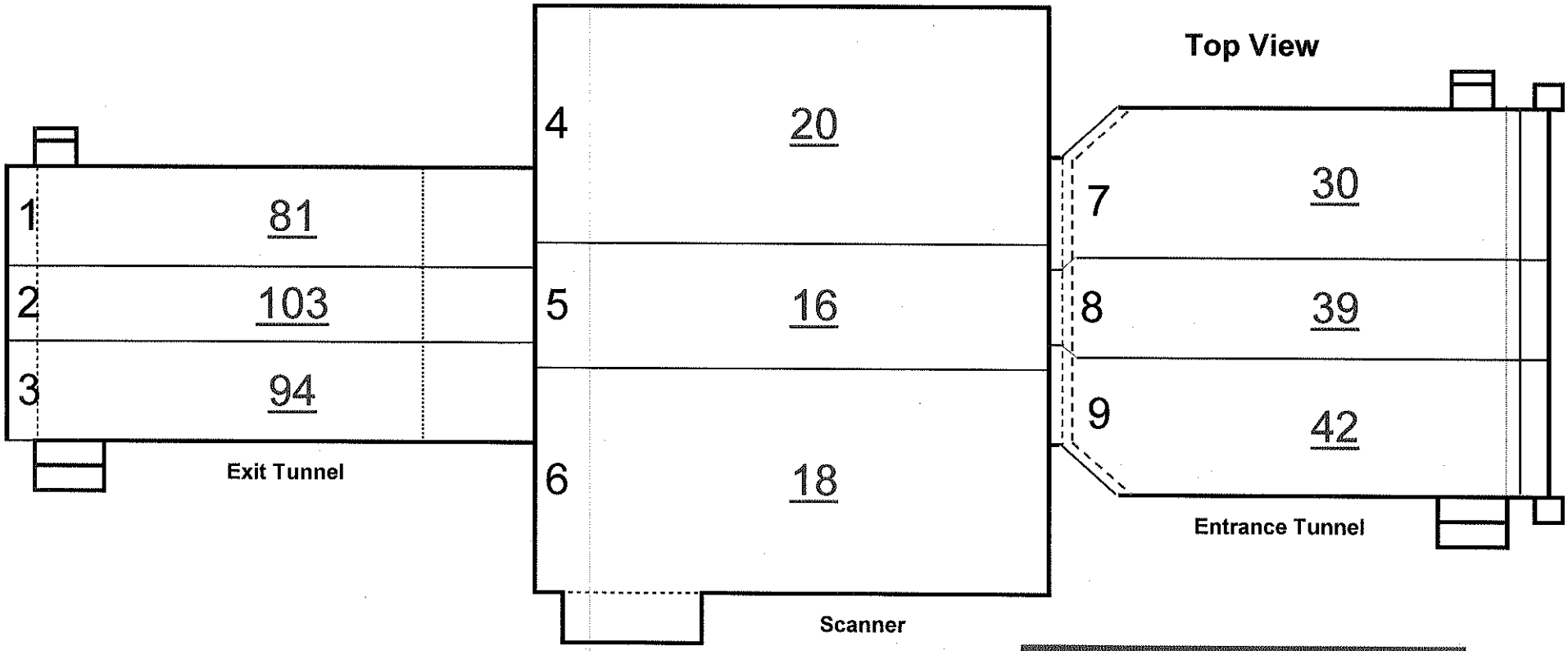

GOOD

Top View			
Scattered Radiation Measurement Points Worksheet			No PROBLEM
Record highest reading per panel		µR/Hr	
1	Exit Conveyor Top Panel	81	
2	Exit Conveyor Top Panel	103	
3	Exit Conveyor Top Panel	94	
4	Scanner Conveyor Top Panel	20	
5	Scanner Conveyor Top Panel	16	
6	Scanner Conveyor Top Panel	18	
7	Entrance Conveyor Top Panel	30	
8	Entrance Conveyor Top Panel	39	
9	Entrance Conveyor Top Panel	42	

Highest Reading	103
Average Reading	49
Lowest Reading	16

RADIATION SURVEY WORKSHEET

SIDE PROFILE VIEW (OPPOSITE AC)

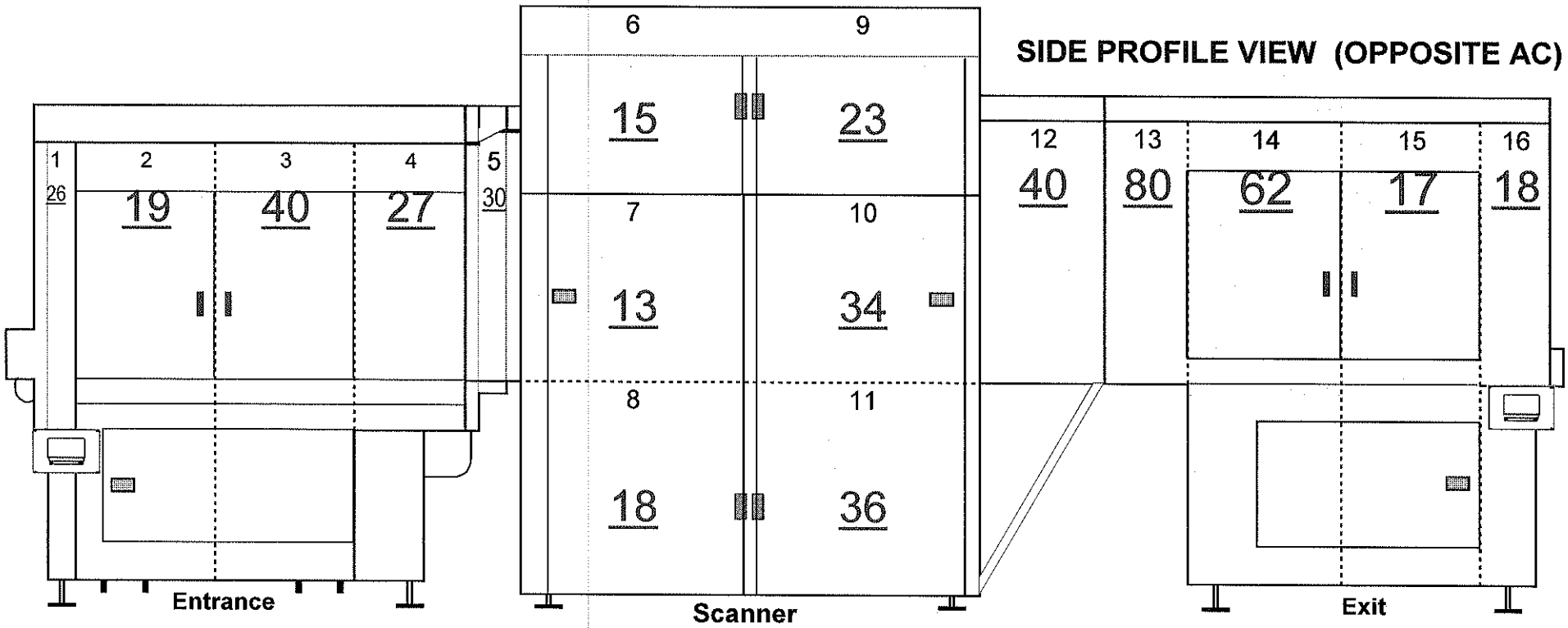

SYSTEM - SIDE PROFILE VIEW (Opposite AC Side)			
Scattered Radiation Measurement Points Worksheet			No PROBLEM
	Record highest reading per panel	µR/Hr	
1	Entrance Conveyor Panel	26	
2	Entrance Conveyor Panel	19	
3	Entrance Conveyor Panel	40	
4	Entrance Conveyor Panel	27	
5	Entrance Conveyor / Scanner Panel	30	
6	Upper Scanner Panel	15	
7	Middle Scanner Panel	13	
8	Lower Scanner Panel	18	
9	Upper Scanner Panel	23	
10	Middle Scanner Panel	34	
11	Lower Scanner Panel	36	
12	Exit Conveyor / Scanner Panel	40	
13	Exit Conveyor Panel	80	
14	Exit Conveyor Panel	62	
15	Exit Conveyor Panel	17	
16	Exit Conveyor Panel	18	

GOOD

Highest Reading	80
Average Reading	31
Low Reading	13

12/28/2010

RADIATION SURVEY WORKSHEET

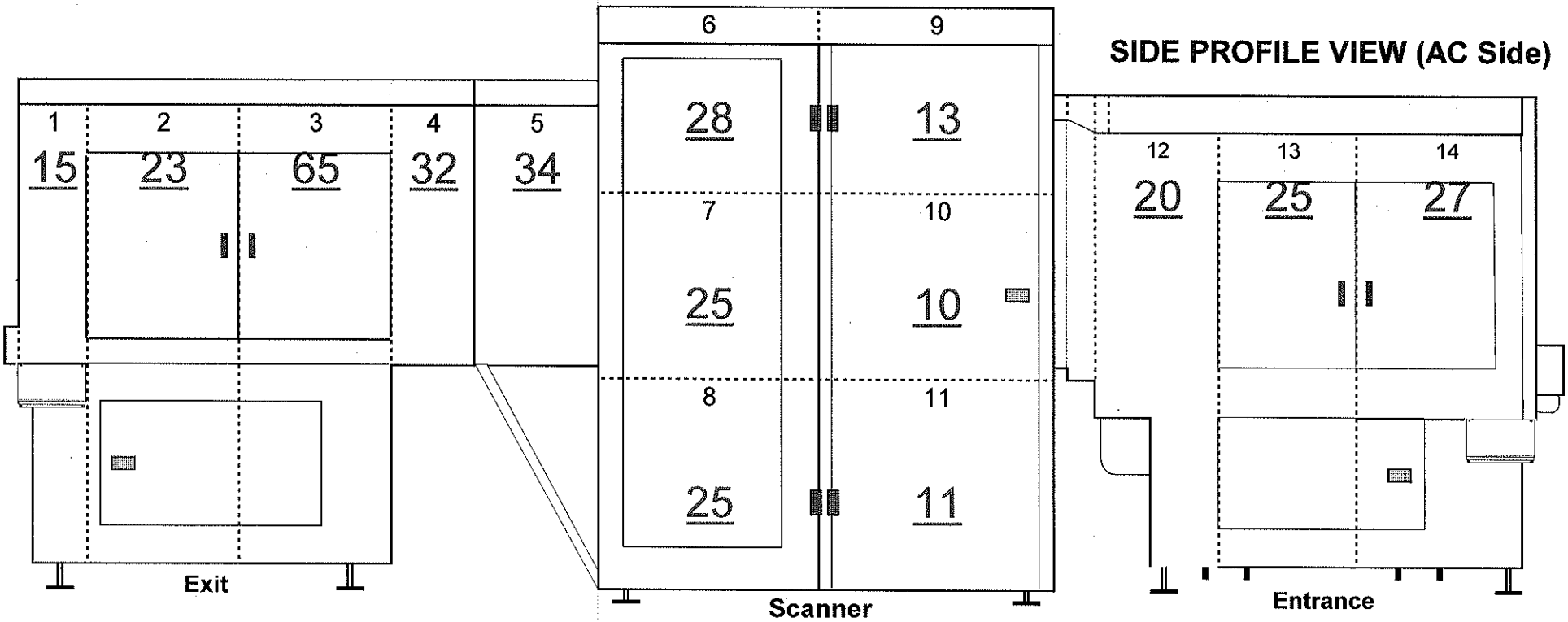

SYSTEM - SIDE PROFILE VIEW (AC Side)			
Scattered Radiation Measurement Points Worksheet			No PROBLEM
	Record highest reading per panel	µR/Hr	
1	Exit Conveyor Panel	15	
2	Exit Conveyor Panel	23	
3	Exit Conveyor Panel	65	
4	Exit Conveyor Panel	32	
5	Exit Conveyor / Scanner Panel	34	
6	Upper Scanner Pane	28	
7	Middle Scanner Panel	25	
8	Lower Scanner Panel	25	
9	Upper Scanner Panel	13	
10	Middle Scanner Panel	10	
11	Lower Scanner Panel	11	
12	Entrance Conveyor / Scanner Panel	20	
13	Entrance Conveyor Panel	25	
14	Entrance Conveyor Panel	27	

GOOD

Highest Reading	65
Average Reading	25
Low Reading	10

RADIATION SURVEY WORKSHEET

SYSTEM - FACES (End Views)

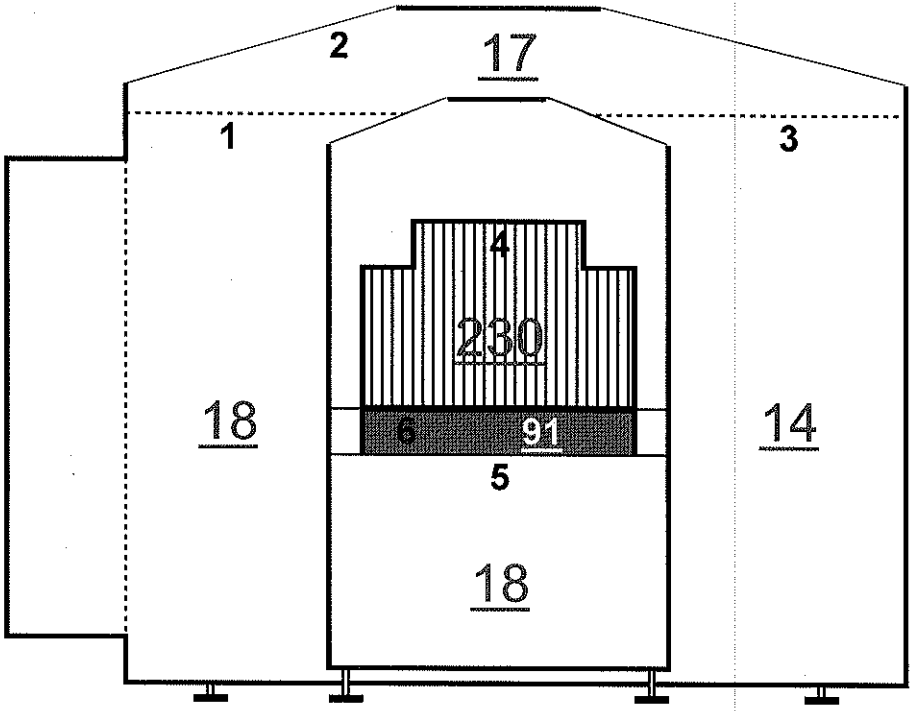

eXaminer entrance

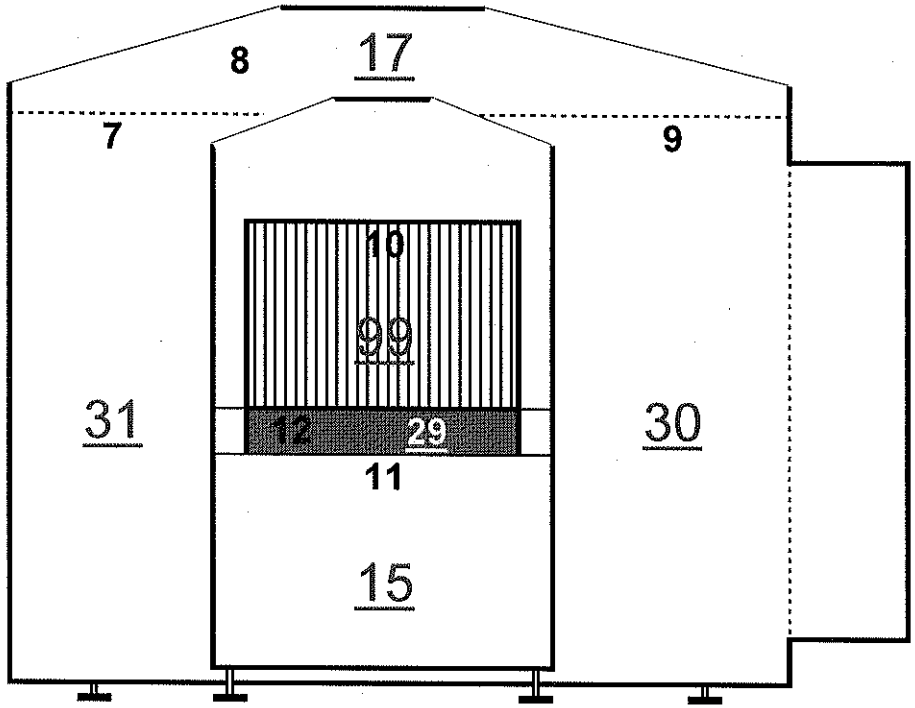

eXaminer exit

SYSTEM - FACES (End Views)			
Scattered Radiation Measurement Points Worksheet			No PROBLEM
Record highest reading per panel		µR/Hr	
1	Scanner Panel	18	
2	Scanner Top Panel	17	
3	Scanner Panel	14	
4	Belt Entrance	230	
5	Entrance Lower Panel	18	
6	Belt Lower Facia Cover Entrance	91	
7	Scanner Panel	31	
8	Scanner Top Panel	17	
9	Scanner Panel	30	
10	Belt Exit	99	
11	Exit Lower Panel	15	
12	Belt Lower Facia Cover Exit	29	

GOOD

Highest Reading	230
Average Reading	51
Low Reading	14

12/28/2010