RADIATION SURVEY WORKSHEET

eXaminer Radiation Survey Information

Airport:	FLL	Scanner Location:	TERM 1	Case#:	297439
Personnel Performing Radiation Survey:	[redacted]			Date Survey Performed:	4/17/2010

Scanner Serial Number:	6295	Entrance Tunnel Serial Number:	2086a	Exit Tunnel Serial Number:	2086b
High Reading:	30	High Reading:	72	High Reading:	49
Average Reading:	16.70	Average Reading:	18.88	Average Reading:	19.19
Min. Reading:	10	Min. Reading:	10	Min. Reading:	7
	Good		Good		Good

Radiation Meter:	Type Meter:	451P	Meter Serial Number:	12	Calibration Due Date:	March 3, 2010

NOTES

(Click Here and SELECT ONE)

Rename this Document before starting the Survey to:

Record Voltage and Bean Current here:

Voltage: 164322 KV | Beam Current: 9.9 mA

Maximum Safe Readings	Scanner	350	Tunnels	350	Curtains	350

Step:	Procedure	Expected results
1.	Set Up: Obtain Inovision Ion Chamber Survey Meter and in an area away from the scanners, turn on the meter by pressing the On-Off key. Wait approx. 4 minutes for the meter to run through the initialization procedure.	The GUI will be visible and will indicate Standby. After the radiation meter initialization procedure is complete the meter will be reading less than 20 µR/hr and the meter will be ready for use.
2.	The scanner will be in Standby. Change the conveyor switch on the scanner to Stop. Change the exit tunnel conveyor switch to Off to stop the conveyor.	Both conveyors should be stopped.
3.	On the GUI dropdown screen, select diagnostic, followed by Radiation Survey. A radiation survey window will appear. Click "Turn On" button to turn x-rays on. Turn on x-rays prompt will say "Place survey bag on belt". Place IQTK bag on Entry Conveyor Belt.	A window indicating "Radiation Survey" will appear.
4.	When "Bag in survey position" appears, go to the FCC monitor and select "2" then <Enter>, verify and record the voltage and current in the displayed on the FCC screen in the planks provided above.	The high voltage is between 144KV and 176KV. The current is between 8.8mA and 10.6mA and the scanner X-ray indicator lights are on.
5.	Survey one of the areas indicated by the boxes in Appendix A2. Record the highest reading within the area. Repeat the process until all areas are surveyed and readings are recorded.	As the survey is conducted, the radiation meter indicates the degree of radiation emission.
6.	Review all radiation data sheets for high readings.	Readings shall not exceed 350 uR/hr in any box.
7.	After radiation survey is complete, click on "Start Conveyor" button on the GUI. Click the "Turn Off" button to turn off x-rays. Next click "Done". The IQTK bag will eject from exit tunnel. EDAC will reboot.	IQTK bag is ejected and scanner reboots.
7.	Visually inspect the entrance and exit of the system for X-ray caution hazard signs.	X-ray hazard signs reading "Do not insert any part of the body when system is energized" are posted at entrance and exit of system.
9.	Fill out the eXaminer radiation sticker and adhere to to the frame of the eXaminer under door #5 on the left side of the scanner.	Readings shall not exceed 350 uR/hr in any box.

RADIATION SURVEY WORKSHEET

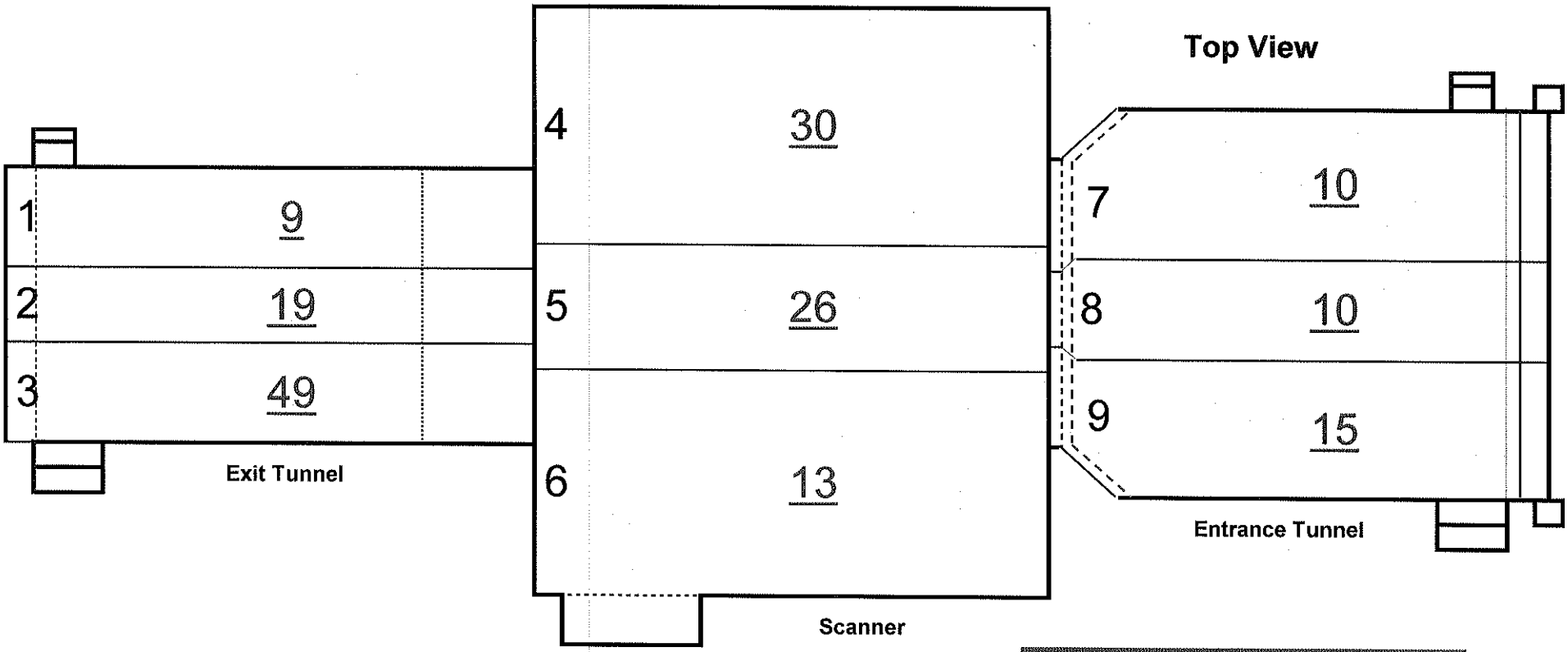

GOOD

Top View			
Scattered Radiation Measurement Points Worksheet			No PROBLEM
Record highest reading per panel		µR/Hr	
1	Exit Conveyor Top Panel	9	
2	Exit Conveyor Top Panel	19	
3	Exit Conveyor Top Panel	49	
4	Scanner Conveyor Top Panel	30	
5	Scanner Conveyor Top Panel	26	
6	Scanner Conveyor Top Panel	13	
7	Entrance Conveyor Top Panel	10	
8	Entrance Conveyor Top Panel	10	
9	Entrance Conveyor Top Panel	15	

Highest Reading	49
Average Reading	20
Lowest Reading	9

12/28/2010

RADIATION SURVEY WORKSHEET

SIDE PROFILE VIEW (OPPOSITE AC)

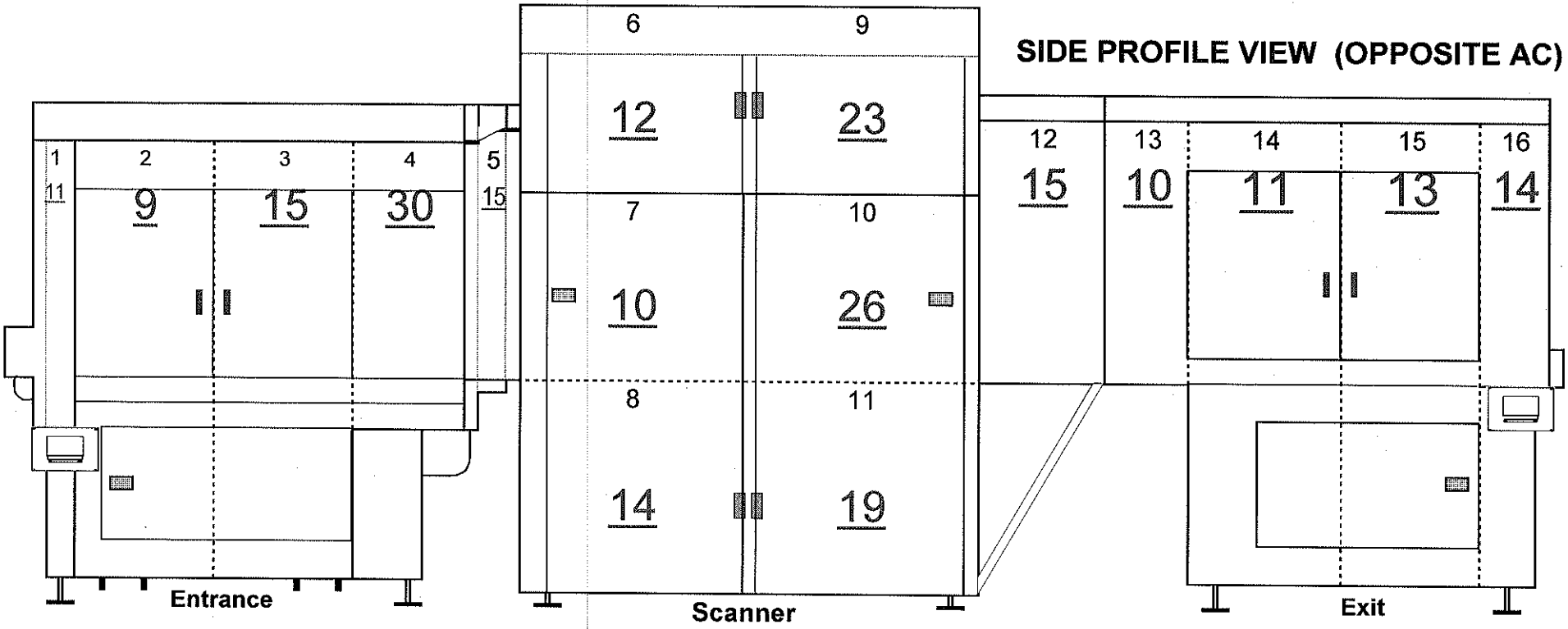

SYSTEM - SIDE PROFILE VIEW (Opposite AC Side)			
Scattered Radiation Measurement Points Worksheet			No PROBLEM
	Record highest reading per panel	µR/Hr	
1	Entrance Conveyor Panel	11	
2	Entrance Conveyor Panel	9	
3	Entrance Conveyor Panel	15	
4	Entrance Conveyor Panel	30	
5	Entrance Conveyor / Scanner Panel	15	
6	Upper Scanner Panel	12	
7	Middle Scanner Panel	10	
8	Lower Scanner Panel	14	
9	Upper Scanner Panel	23	
10	Middle Scanner Panel	26	
11	Lower Scanner Panel	19	
12	Exit Conveyor / Scanner Panel	15	
13	Exit Conveyor Panel	10	
14	Exit Conveyor Panel	11	
15	Exit Conveyor Panel	13	
16	Exit Conveyor Panel	14	

GOOD

Highest Reading	30
Average Reading	15
Low Reading	9

12/28/2010

RADIATION SURVEY WORKSHEET

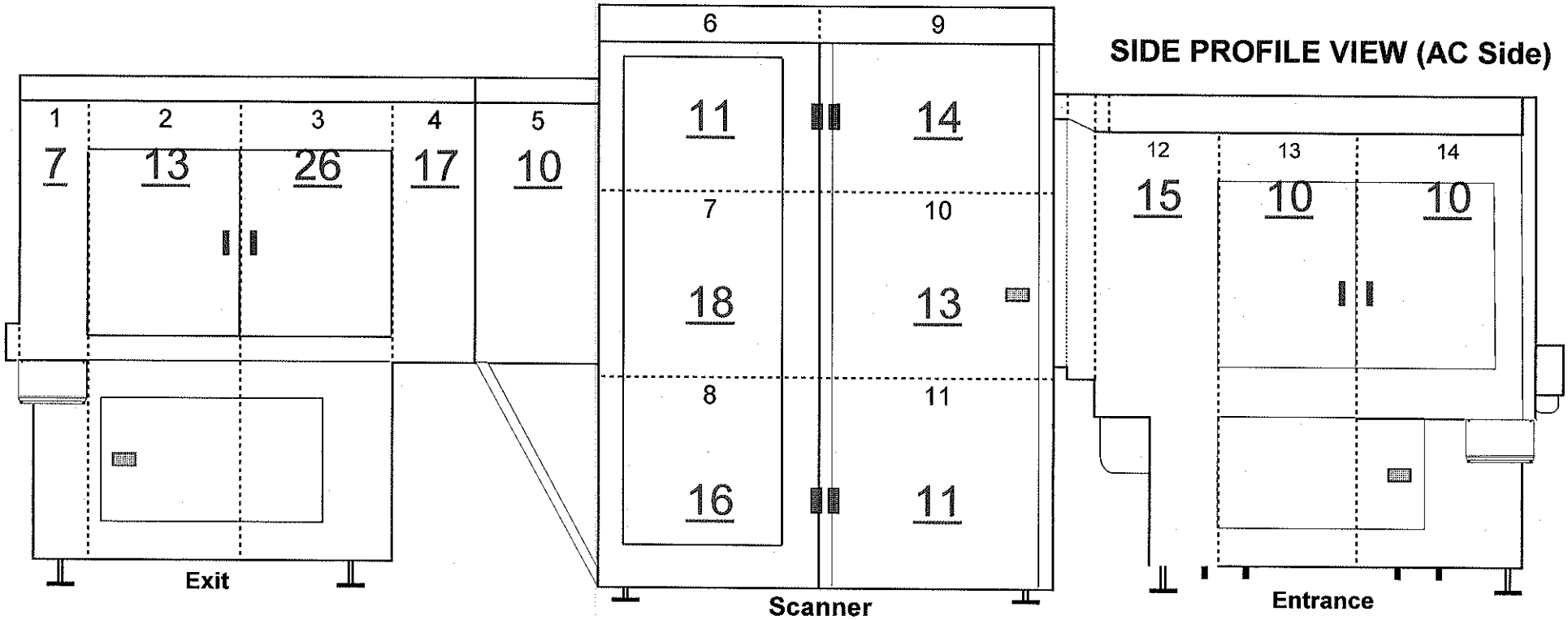

SYSTEM - SIDE PROFILE VIEW (AC Side)			
Scattered Radiation Measurement Points Worksheet			No PROBLEM
	Record highest reading per panel	µR/Hr	
1	Exit Conveyor Panel	7	
2	Exit Conveyor Panel	13	
3	Exit Conveyor Panel	26	
4	Exit Conveyor Panel	17	
5	Exit Conveyor / Scanner Panel	10	
6	Upper Scanner Pane	11	
7	Middle Scanner Panel	18	
8	Lower Scanner Panel	16	
9	Upper Scanner Panel	14	
10	Middle Scanner Panel	13	
11	Lower Scanner Panel	11	
12	Entrance Conveyor / Scanner Panel	15	
13	Entrance Conveyor Panel	10	
14	Entrance Conveyor Panel	10	

GOOD

Highest Reading	26
Average Reading	14
Low Reading	7

RADIATION SURVEY WORKSHEET

SYSTEM - FACES (End Views)

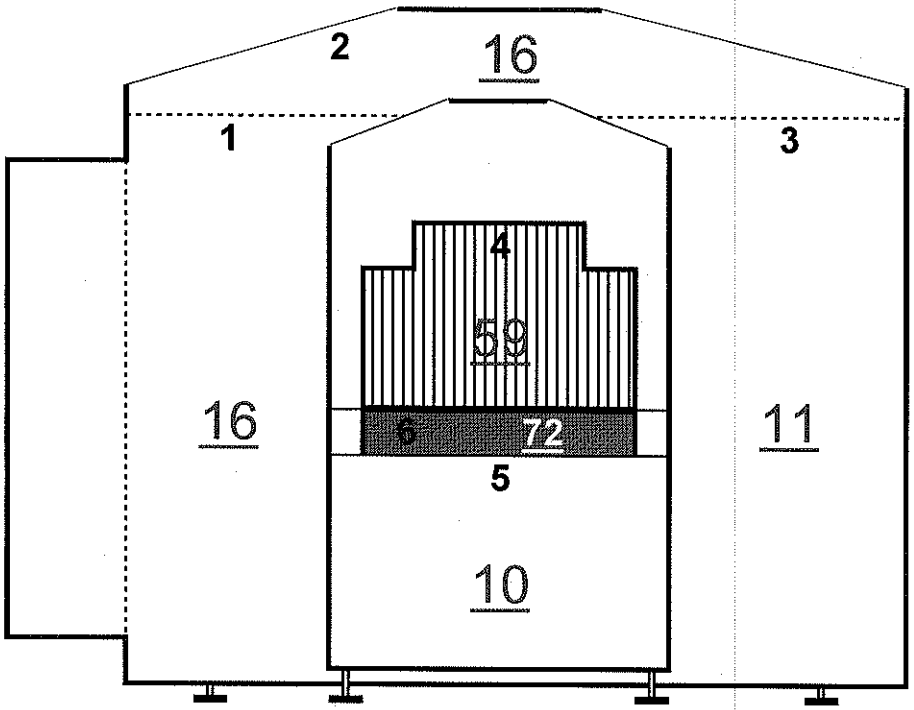

eXaminer entrance

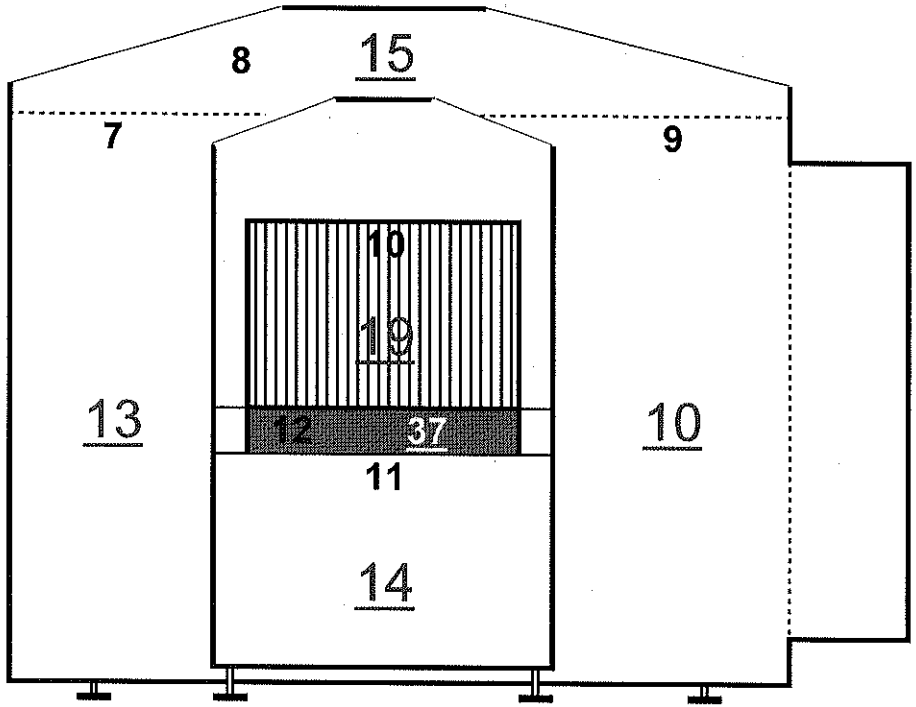

eXaminer exit

SYSTEM - FACES (End Views)			
Scattered Radiation Measurement Points Worksheet			No PROBLEM
Record highest reading per panel		µR/Hr	
1	Scanner Panel	16	
2	Scanner Top Panel	16	
3	Scanner Panel	11	
4	Belt Entrance	59	
5	Entrance Lower Panel	10	
6	Belt Lower Facia Cover Entrance	72	
7	Scanner Panel	13	
8	Scanner Top Panel	15	
9	Scanner Panel	10	
10	Belt Exit	19	
11	Exit Lower Panel	14	
12	Belt Lower Facia Cover Exit	37	

GOOD

Highest Reading	72
Average Reading	24
Low Reading	10

12/28/2010