RADIATION SURVEY WORKSHEET

eXaminer Radiation Survey Information

Airport:	PHL	Scanner Location:	PHL	Case#:	
Personnel Performing Radiation Survey:	[redacted]			Date Survey Performed:	4/26/2010

Scanner Serial Number:	6316	Entrance Tunnel Serial Number:	6316	Exit Tunnel Serial Number:	6316
High Reading:	87	High Reading:	99	High Reading:	65
Average Reading:	50.04	Average Reading:	43.85	Average Reading:	39.25
Min. Reading:	21	Min. Reading:	27	Min. Reading:	16
Good		Good		Good	

Radiation Meter:	Type Meter:	451P	Meter Serial Number:	6647	Calibration Due Date:	April 20, 2011

NOTES

Complete Radiation Survey (CRS)	Record Voltage and Bean Current here:					
Rename this Document before starting the Survey to:	Voltage:	165	KV	Beam Current:	10.0	mA
-CRS-26APR2010-6316	**Maximum Safe Readings**	**Scanner**	350	**Tunnels**	350	**Curtains** 350

Step:	Procedure	Expected results
1.	Set Up: Obtain Inovision Ion Chamber Survey Meter and in an area away from the scanners, turn on the meter by pressing the On-Off key. Wait approx. 4 minutes for the meter to run through the initialization procedure.	The GUI will be visible and will indicate Standby. After the radiation meter initialization procedure is complete the meter will be reading less than 20 µR/hr and the meter will be ready for use.
2.	The scanner will be in Standby. Change the conveyor switch on the scanner to Stop. Change the exit tunnel conveyor switch to Off to stop the conveyor.	Both conveyors should be stopped.
3.	On the GUI dropdown screen, select diagnostic, followed by Radiation Survey. A radiation survey window will appear. Click "Turn On" button to turn x-rays on. Turn on x-rays prompt will say "Place survey bag on belt". Place IQTK bag on Entry Conveyor Belt.	A window indicating "Radiation Survey" will appear.
4.	When "Bag in survey position" appears, go to the FCC monitor and select "2" then <Enter>, verify and record the voltage and current in the displayed on the FCC screen in the planks provided above.	The high voltage is between 144KV and 176KV. The current is between 8.8mA and 10.6mA and the scanner X-ray indicator lights are on.
5.	Survey one of the areas indicated by the boxes in Appendix A2. Record the highest reading within the area. Repeat the process until all areas are surveyed and readings are recorded.	As the survey is conducted, the radiation meter indicates the degree of radiation emission.
6.	Review all radiation data sheets for high readings.	Readings shall not exceed 350 uR/hr in any box.
7.	After radiation survey is complete, click on "Start Conveyor" button on the GUI. Click the "Turn Off" button to turn off x-rays. Next click "Done". The IQTK bag will eject from exit tunnel. EDAC will reboot.	IQTK bag is ejected and scanner reboots.
7.	Visually inspect the entrance and exit of the system for X-ray caution hazard signs.	X-ray hazard signs reading "Do not insert any part of the body when system is energized" are posted at entrance and exit of system.
9.	Fill out the eXaminer radiation stickers and place on the eXaminer in accordance with Examiner Technical Bulletin ex253.	Readings shall not exceed 350 uR/hr in any box.

RADIATION SURVEY WORKSHEET

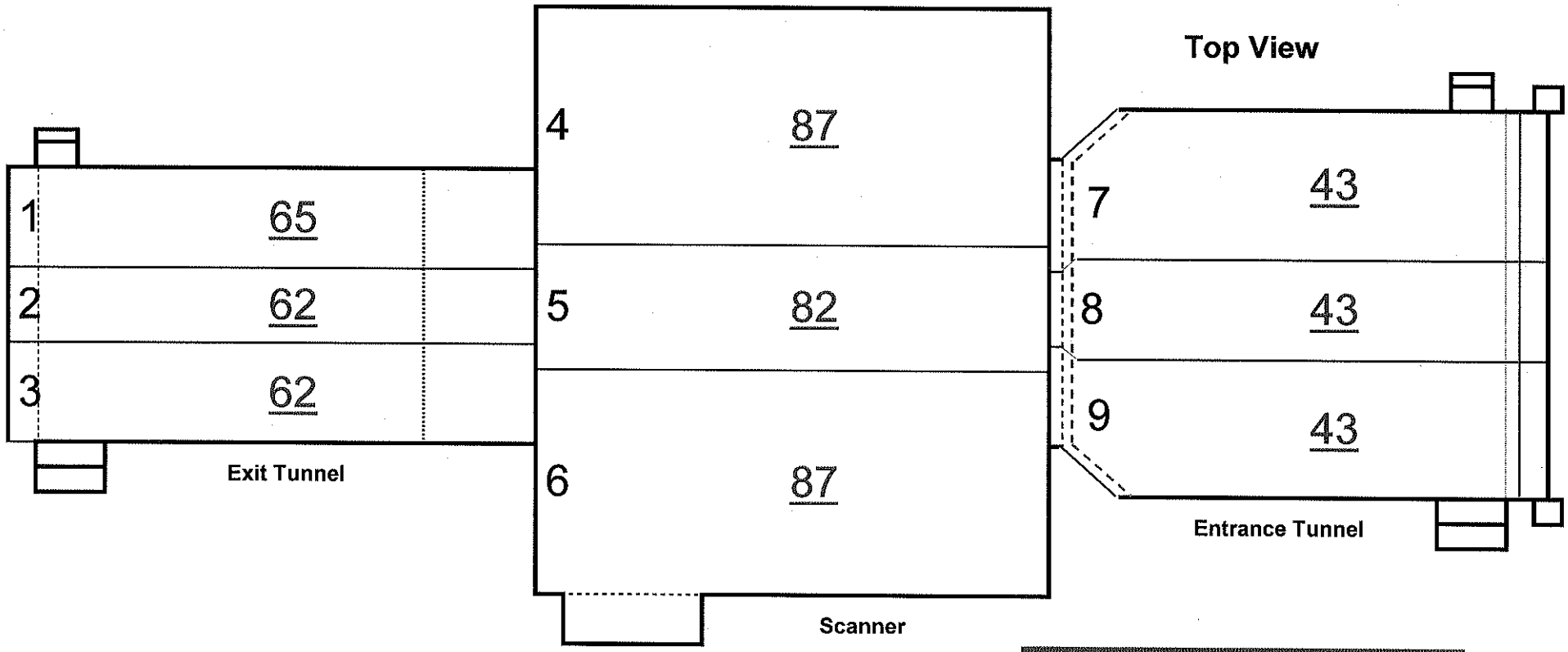

GOOD

Top View			
Scattered Radiation Measurement Points Worksheet			No PROBLEM
Record highest reading per panel		µR/Hr	
1	Exit Conveyor Top Panel	65	
2	Exit Conveyor Top Panel	62	
3	Exit Conveyor Top Panel	62	
4	Scanner Conveyor Top Panel	87	
5	Scanner Conveyor Top Panel	82	
6	Scanner Conveyor Top Panel	87	
7	Entrance Conveyor Top Panel	43	
8	Entrance Conveyor Top Panel	43	
9	Entrance Conveyor Top Panel	43	

Highest Reading	87
Average Reading	64
Lowest Reading	43

RADIATION SURVEY WORKSHEET

SIDE PROFILE VIEW (OPPOSITE AC)

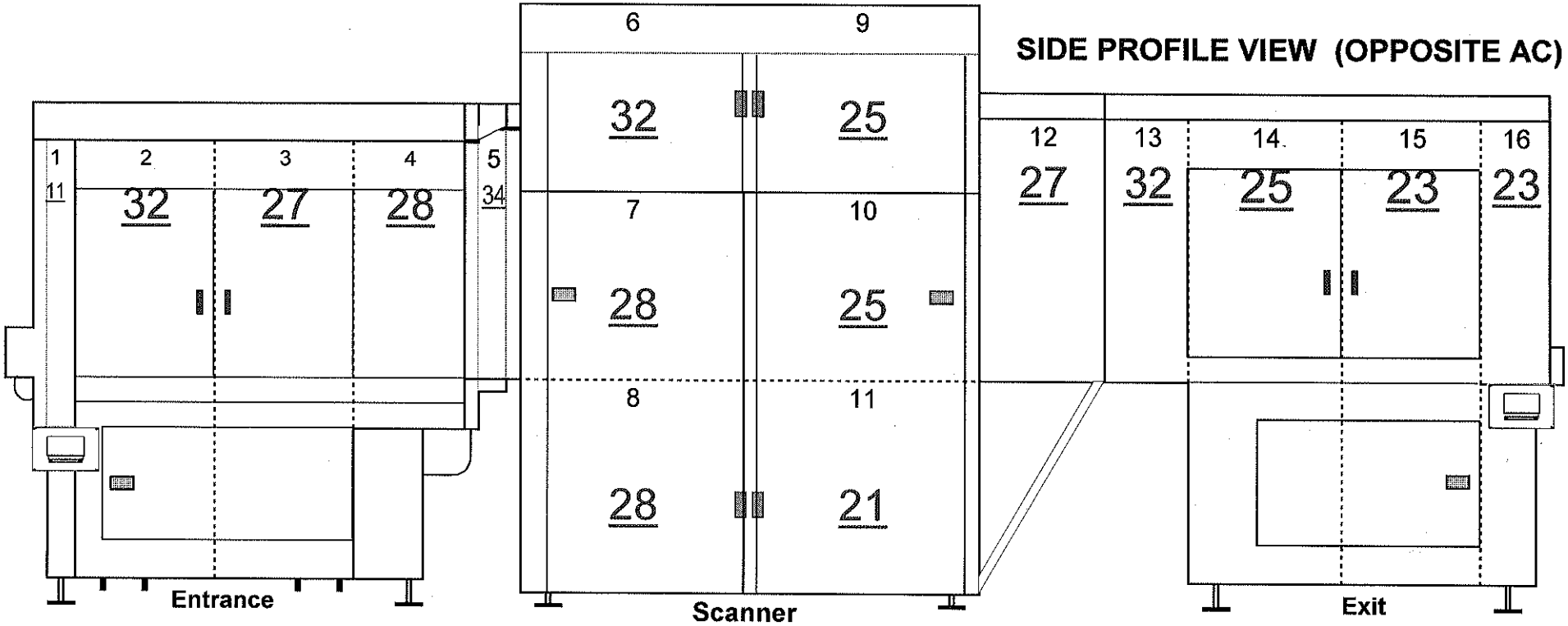

SYSTEM - SIDE PROFILE VIEW (Opposite AC Side)			
Scattered Radiation Measurement Points Worksheet			No PROBLEM
	Record highest reading per panel	µR/Hr	
1	Entrance Conveyor Panel	11	
2	Entrance Conveyor Panel	32	
3	Entrance Conveyor Panel	27	
4	Entrance Conveyor Panel	28	
5	Entrance Conveyor / Scanner Panel	34	
6	Upper Scanner Panel	32	
7	Middle Scanner Panel	28	
8	Lower Scanner Panel	28	
9	Upper Scanner Panel	25	
10	Middle Scanner Panel	25	
11	Lower Scanner Panel	21	
12	Exit Conveyor / Scanner Panel	27	
13	Exit Conveyor Panel	32	
14	Exit Conveyor Panel	25	
15	Exit Conveyor Panel	23	
16	Exit Conveyor Panel	23	

GOOD

Highest Reading	34
Average Reading	26
Low Reading	11

12/28/2010

RADIATION SURVEY WORKSHEET

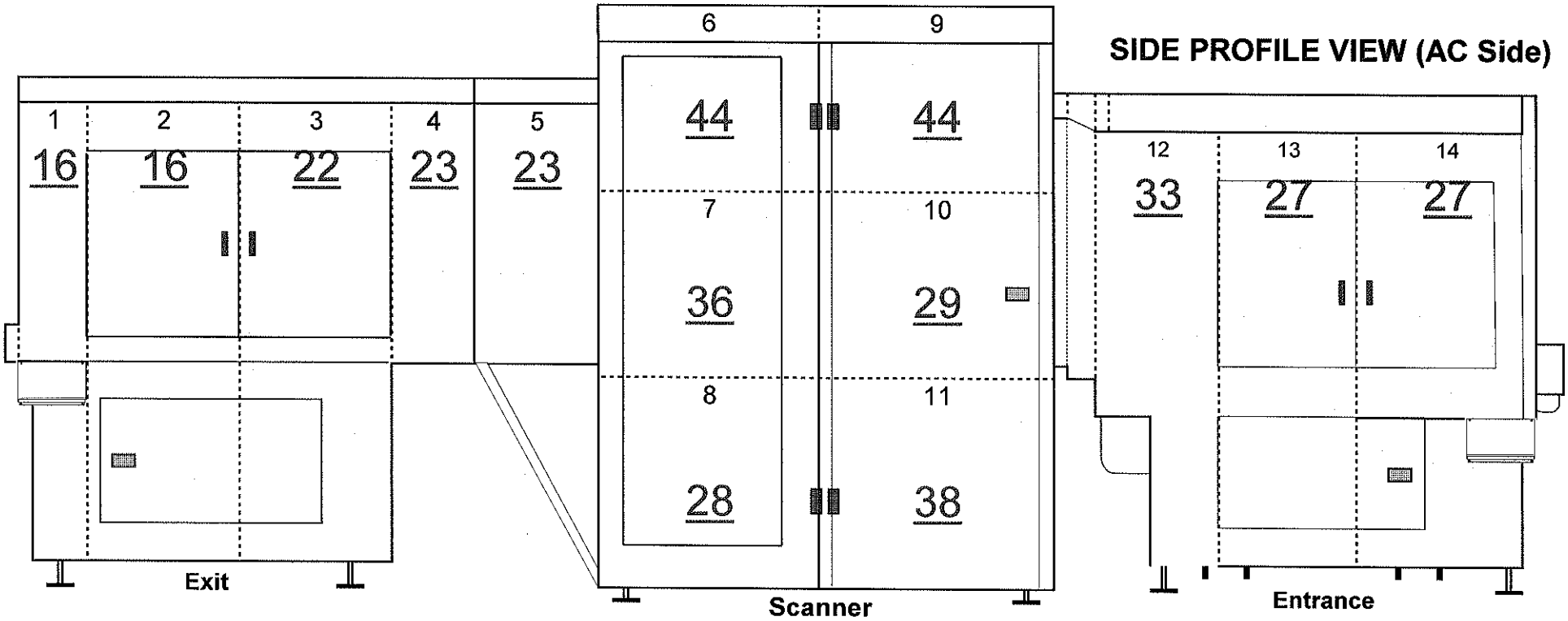

SYSTEM - SIDE PROFILE VIEW (AC Side)			
Scattered Radiation Measurement Points Worksheet			No PROBLEM
Record highest reading per panel		µR/Hr	
1	Exit Conveyor Panel	16	
2	Exit Conveyor Panel	16	
3	Exit Conveyor Panel	22	
4	Exit Conveyor Panel	23	
5	Exit Conveyor / Scanner Panel	23	
6	Upper Scanner Pane	44	
7	Middle Scanner Panel	36	
8	Lower Scanner Panel	28	
9	Upper Scanner Panel	44	
10	Middle Scanner Panel	29	
11	Lower Scanner Panel	38	
12	Entrance Conveyor / Scanner Panel	33	
13	Entrance Conveyor Panel	27	
14	Entrance Conveyor Panel	27	

GOOD

Highest Reading	44
Average Reading	29
Low Reading	16

RADIATION SURVEY WORKSHEET

SYSTEM - FACES (End Views)

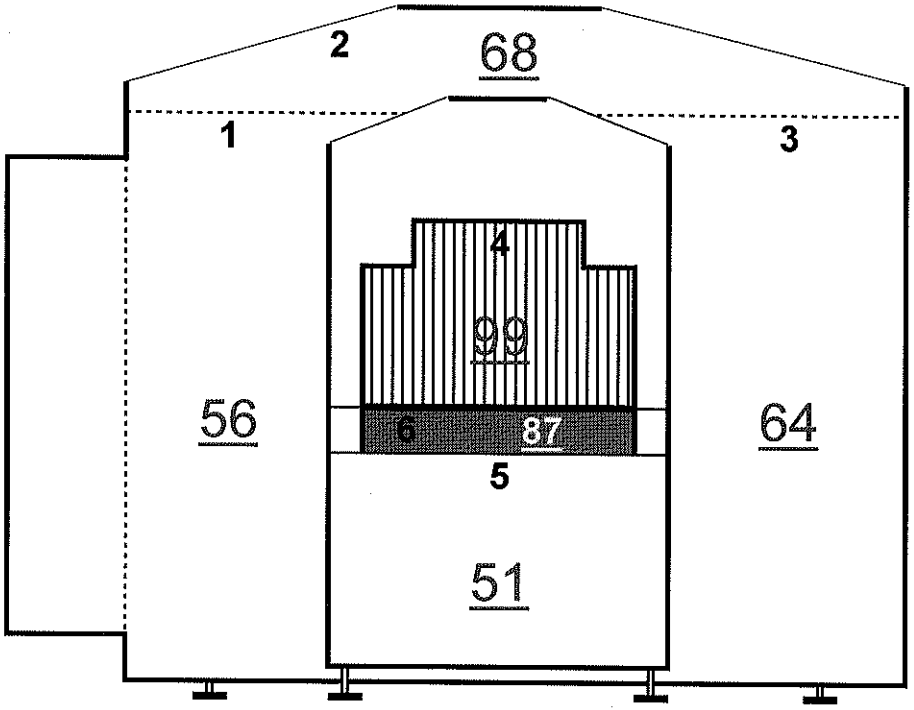

eXaminer entrance

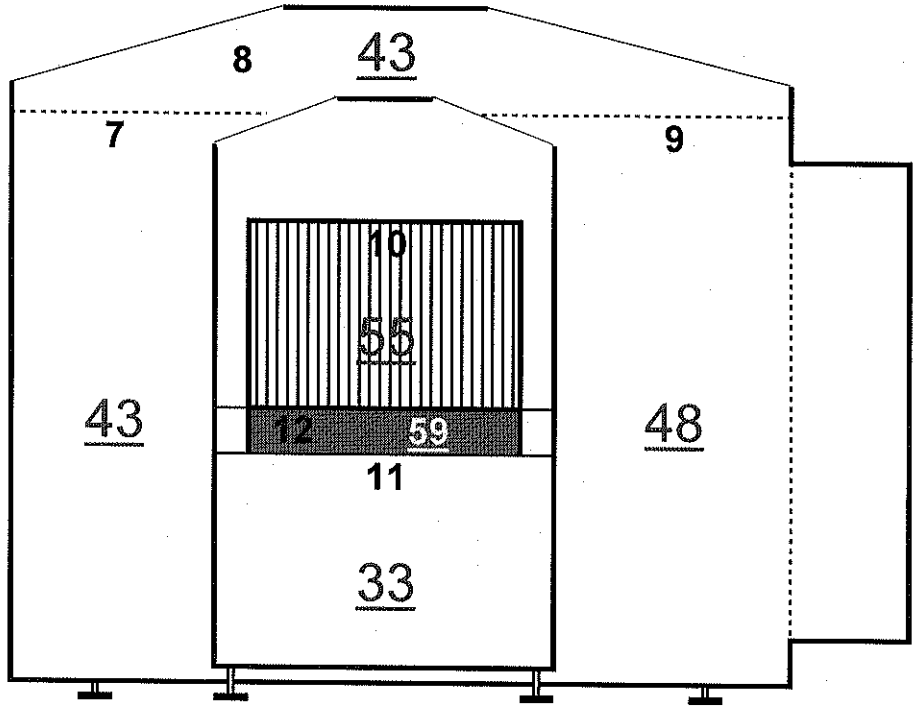

eXaminer exit

SYSTEM - FACES (End Views)			
Scattered Radiation Measurement Points Worksheet			No PROBLEM
Record highest reading per panel		µR/Hr	
1	Scanner Panel	56	
2	Scanner Top Panel	68	
3	Scanner Panel	64	
4	Belt Entrance	99	
5	Entrance Lower Panel	51	
6	Belt Lower Facia Cover Entrance	87	
7	Scanner Panel	43	
8	Scanner Top Panel	43	
9	Scanner Panel	48	
10	Belt Exit	55	
11	Exit Lower Panel	33	
12	Belt Lower Facia Cover Exit	59	

GOOD

Highest Reading	99
Average Reading	59
Low Reading	33

12/28/2010