RADIATION SURVEY WORKSHEET

eXaminer Radiation Survey Information

Airport:	*Palm Beach International Airport*	Scanner Location:	*Baggage Handeling Room*	Case#:	PBI-C325807
Personnel Performing Radiation Survey:	[redacted]			Date Survey Performed:	*10/6/2010*

Scanner Serial Number:	*6318*	Entrance Tunnel Serial Number:	*2267A*	Exit Tunnel Serial Number:	*2267B*
High Reading:	24	High Reading:	115	High Reading:	162
Average Reading:	12.34	Average Reading:	30.03	Average Reading:	30.65
Min. Reading:	3	Min. Reading:	6	Min. Reading:	7
Good		Good		Good	

Radiation Meter:	Type Meter:	451P	Meter Serial Number:	263	Calibration Due Date:	*October 22, 2010*

NOTES

Complete Radiation Survey (CRS)	Record Voltage and Bean Current here:					
Rename this Document before starting the Survey to:	Voltage:	164	KV	Beam Current:	9.8	mA
PBI-CRS-6OCT2010-6318	**Maximum Safe Readings**	**Scanner**	350	**Tunnels**	350	**Curtains** 350

Step	Procedure	Expected results
1.	Set Up: Obtain Inovision Ion Chamber Survey Meter and in an area away from the scanners, turn on the meter by pressing the On-Off key. Wait approx. 4 minutes for the meter to run through the initialization procedure.	The GUI will be visible and will indicate Standby. After the radiation meter initialization procedure is complete the meter will be reading less than 20 µR/hr and the meter will be ready for use.
2.	The scanner will be in Standby. Change the conveyor switch on the scanner to Stop. Change the exit tunnel conveyor switch to Off to stop the conveyor.	Both conveyors should be stopped.
3.	On the GUI dropdown screen, select diagnostic, followed by Radiation Survey. A radiation survey window will appear. Click "Turn On" button to turn x-rays on. Turn on x-rays prompt will say "Place survey bag on belt". Place IQTK bag on Entry Conveyor Belt.	A window indicating "Radiation Survey" will appear.
4.	When "Bag in survey position" appears, go to the FCC monitor and select "2" then <Enter>, verify and record the voltage and current in the displayed on the FCC screen in the planks provided above.	The high voltage is between 144KV and 176KV. The current is between 8.8mA and 10.6mA and the scanner X-ray indicator lights are on.
5.	Survey one of the areas indicated by the boxes in Appendix A2. Record the highest reading within the area. Repeat the process until all areas are surveyed and readings are recorded.	As the survey is conducted, the radiation meter indicates the degree of radiation emission.
6.	Review all radiation data sheets for high readings.	Readings shall not exceed 350 uR/hr in any box.
7.	After radiation survey is complete, click on "Start Conveyor" button on the GUI. Click the "Turn Off" button to turn off x-rays. Next click "Done". The IQTK bag will eject from exit tunnel. EDAC will reboot.	IQTK bag is ejected and scanner reboots.
7.	Visually inspect the entrance and exit of the system for X-ray caution hazard signs.	X-ray hazard signs reading "Do not insert any part of the body when system is energized" are posted at entrance and exit of system.
9.	Fill out the eXaminer radiation sticker and adhere to to the frame of the eXaminer under door #5 on the left side of the scanner.	Readings shall not exceed 350 uR/hr in any box.

RADIATION SURVEY WORKSHEET

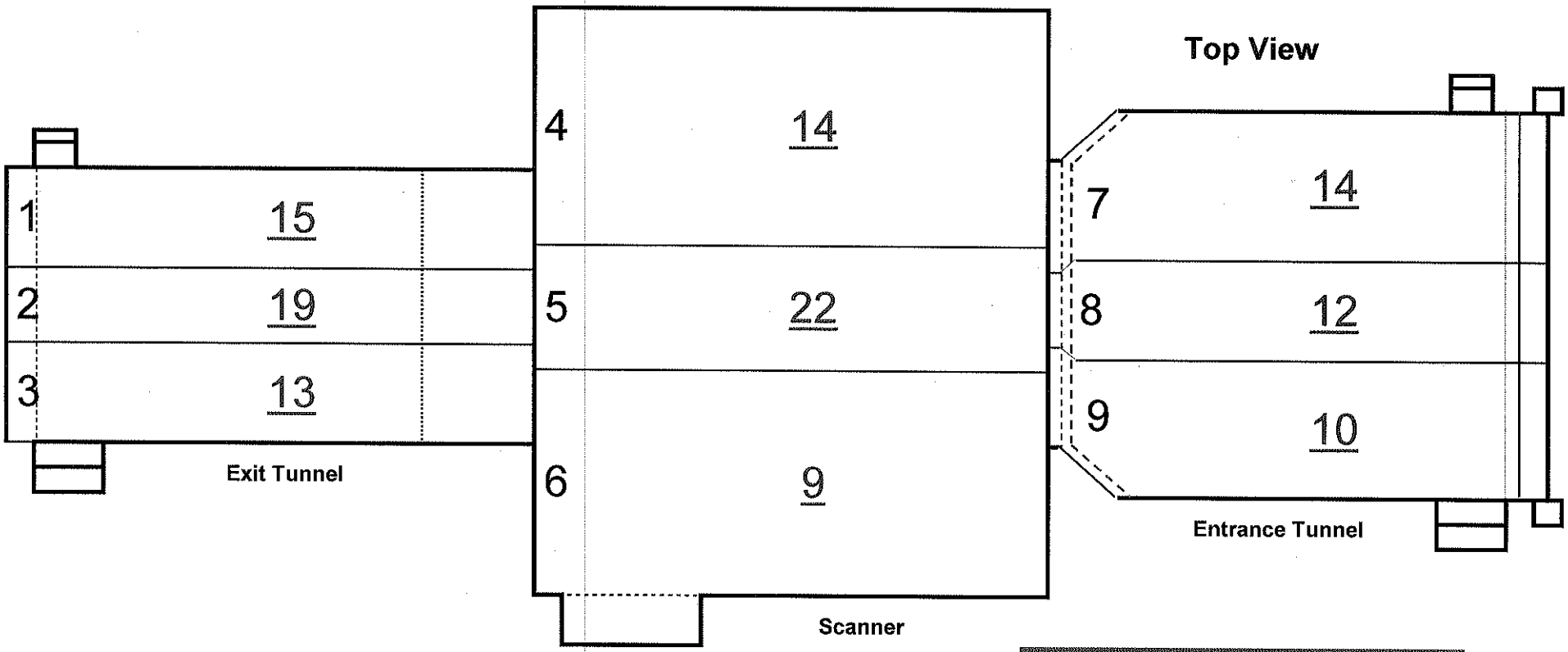

GOOD

Top View			
Scattered Radiation Measurement Points Worksheet			No PROBLEM
Record highest reading per panel		µR/Hr	
1	Exit Conveyor Top Panel	15	
2	Exit Conveyor Top Panel	19	
3	Exit Conveyor Top Panel	13	
4	Scanner Conveyor Top Panel	14	
5	Scanner Conveyor Top Panel	22	
6	Scanner Conveyor Top Panel	9	
7	Entrance Conveyor Top Panel	14	
8	Entrance Conveyor Top Panel	12	
9	Entrance Conveyor Top Panel	10	

Highest Reading	22
Average Reading	14
Lowest Reading	9

RADIATION SURVEY WORKSHEET

SIDE PROFILE VIEW (OPPOSITE AC)

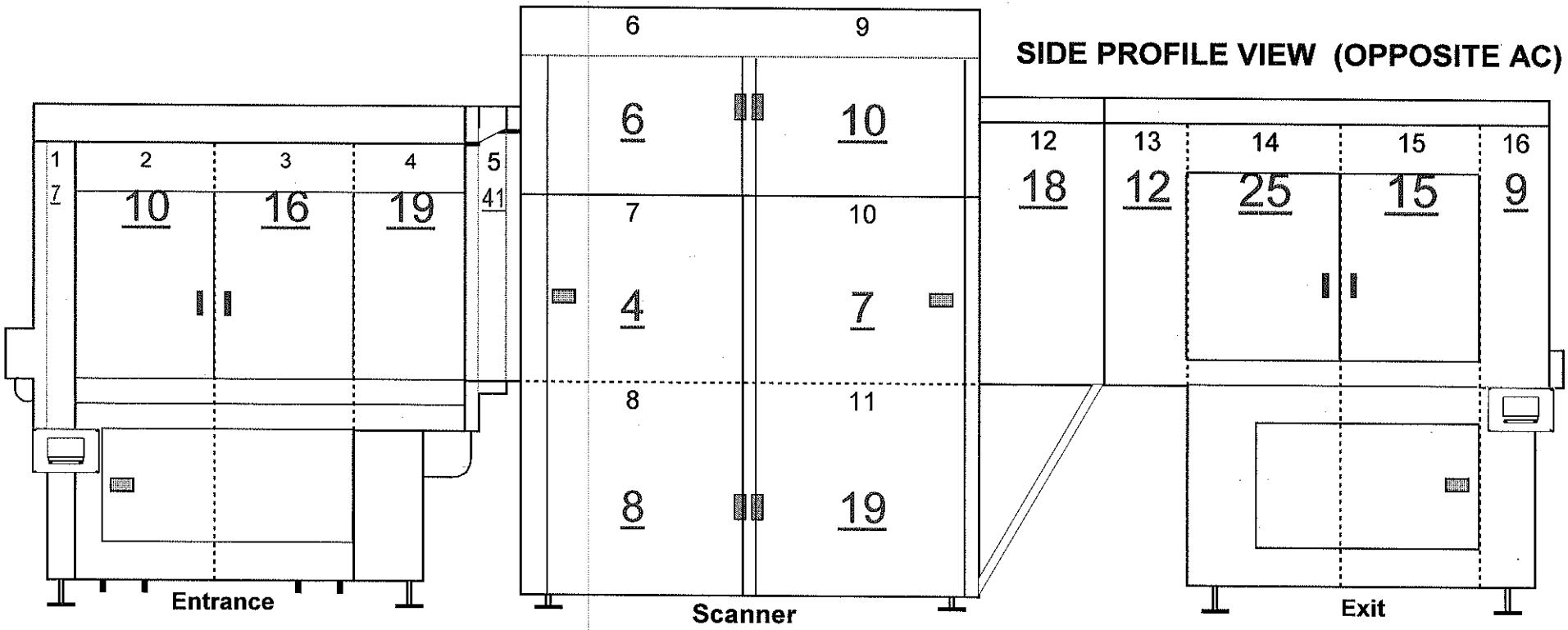

SYSTEM - SIDE PROFILE VIEW (Opposite AC Side)			
Scattered Radiation Measurement Points Worksheet			No PROBLEM
Record highest reading per panel		µR/Hr	
1	Entrance Conveyor Panel	7	
2	Entrance Conveyor Panel	10	
3	Entrance Conveyor Panel	16	
4	Entrance Conveyor Panel	19	
5	Entrance Conveyor / Scanner Panel	41	
6	Upper Scanner Panel	6	
7	Middle Scanner Panel	4	
8	Lower Scanner Panel	8	
9	Upper Scanner Panel	10	
10	Middle Scanner Panel	7	
11	Lower Scanner Panel	19	
12	Exit Conveyor / Scanner Panel	18	
13	Exit Conveyor Panel	12	
14	Exit Conveyor Panel	25	
15	Exit Conveyor Panel	15	
16	Exit Conveyor Panel	9	

GOOD

Highest Reading	41
Average Reading	14
Low Reading	4

12/28/2010

RADIATION SURVEY WORKSHEET

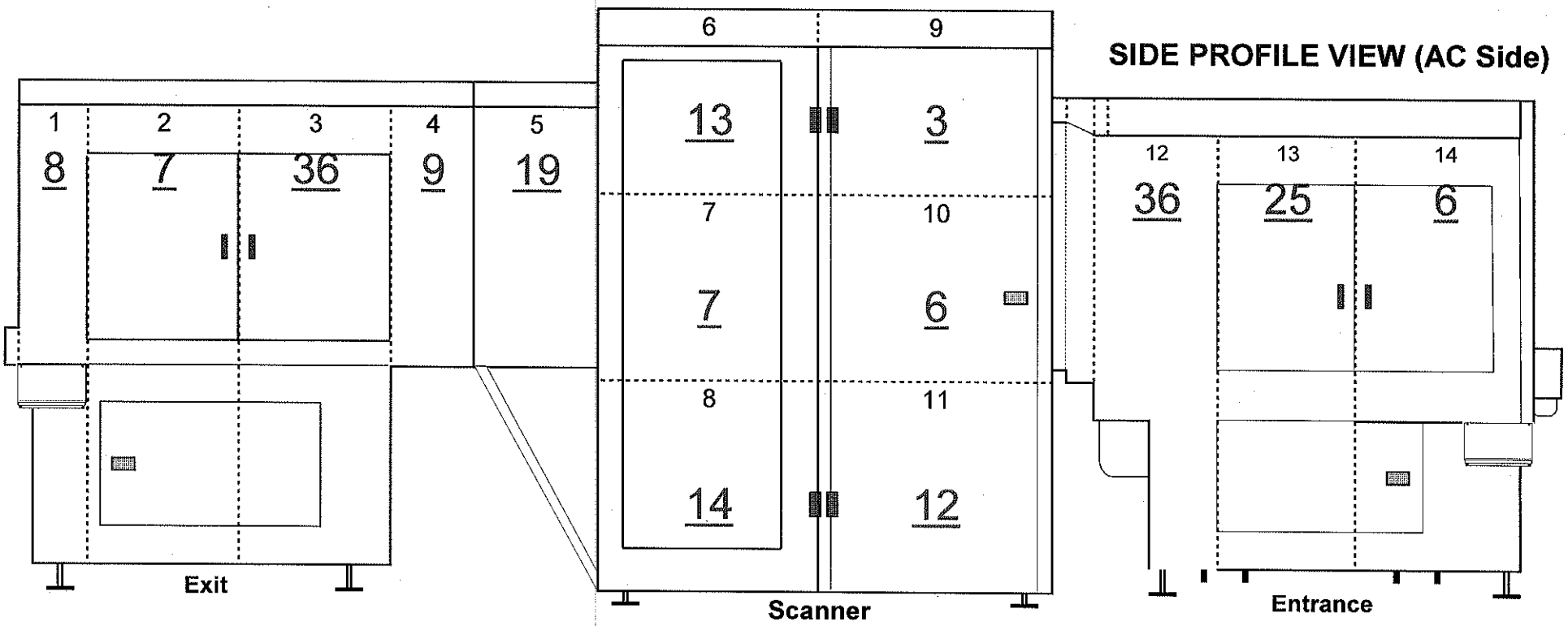

SYSTEM - SIDE PROFILE VIEW (AC Side)			
Scattered Radiation Measurement Points Worksheet			No PROBLEM
Record highest reading per panel		µR/Hr	
1	Exit Conveyor Panel	8	
2	Exit Conveyor Panel	7	
3	Exit Conveyor Panel	36	
4	Exit Conveyor Panel	9	
5	Exit Conveyor / Scanner Panel	19	
6	Upper Scanner Pane	13	
7	Middle Scanner Panel	7	
8	Lower Scanner Panel	14	
9	Upper Scanner Panel	3	
10	Middle Scanner Panel	6	
11	Lower Scanner Panel	12	
12	Entrance Conveyor / Scanner Panel	36	
13	Entrance Conveyor Panel	25	
14	Entrance Conveyor Panel	6	

GOOD

Highest Reading	36
Average Reading	14
Low Reading	3

12/28/2010

RADIATION SURVEY WORKSHEET

SYSTEM - FACES (End Views)

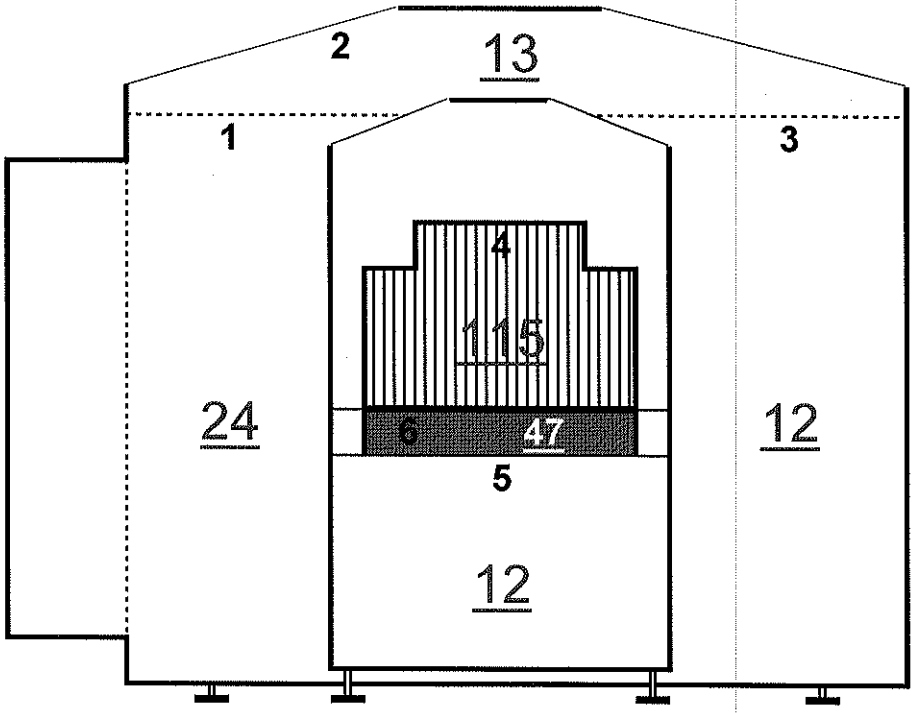

eXaminer entrance

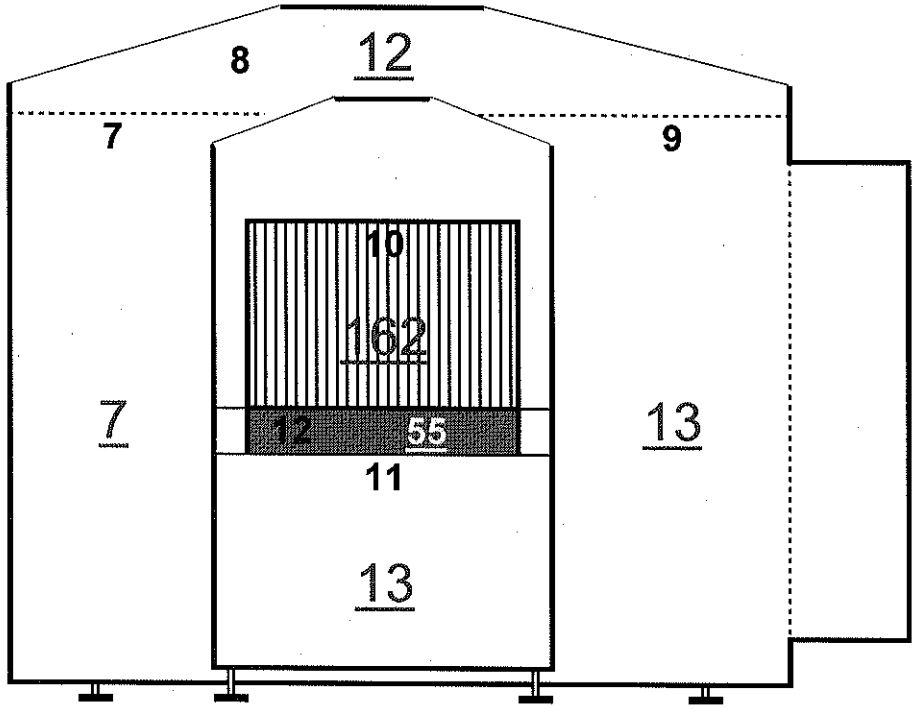

eXaminer exit

SYSTEM - FACES (End Views)			
Scattered Radiation Measurement Points Worksheet			No PROBLEM
Record highest reading per panel		µR/Hr	
1	Scanner Panel	24	
2	Scanner Top Panel	13	
3	Scanner Panel	12	
4	Belt Entrance	115	
5	Entrance Lower Panel	12	
6	Belt Lower Facia Cover Entrance	47	
7	Scanner Panel	7	
8	Scanner Top Panel	12	
9	Scanner Panel	13	
10	Belt Exit	162	
11	Exit Lower Panel	13	
12	Belt Lower Facia Cover Exit	55	

GOOD

Highest Reading	162
Average Reading	40
Low Reading	7

12/28/2010