RADIATION SURVEY WORKSHEET

eXaminer Radiation Survey Information

Airport:	*T.F Green Airport*	Scanner Location:	*Baggage Handeling Room*	Case#:	PVD-C305801
Personnel Performing Radiation Survey:	[redacted]			Date Survey Performed:	*6/11/2010*

Scanner Serial Number:	*6756*	Entrance Tunnel Serial Number:	*1104*	Exit Tunnel Serial Number:	*1090-1B*
High Reading:	71	High Reading:	133	High Reading:	62
Average Reading:	16.97	Average Reading:	27.20	Average Reading:	24.98
Min. Reading:	8	Min. Reading:	8	Min. Reading:	7
Good		Good		Good	

Radiation Meter:	Type Meter:	451P	Meter Serial Number:	6230	Calibration Due Date:	*December 22, 2010*

NOTES

Complete Radiation Survey (CRS)	Record Voltage and Bean Current here:					
Rename this Document before starting the Survey to:	Voltage:	165	KV	Beam Current:	10.0	mA
PVD-CRS-11JUN2010-6756	**Maximum Safe Readings**	**Scanner**	350	**Tunnels**	350	**Curtains** 350

Step:	Procedure	Expected results
1.	Set Up: Obtain Inovision Ion Chamber Survey Meter and in an area away from the scanners, turn on the meter by pressing the On-Off key. Wait approx. 4 minutes for the meter to run through the initialization procedure.	The GUI will be visible and will indicate Standby. After the radiation meter initialization procedure is complete the meter will be reading less than 20 uR/hr and the meter will be ready for use.
2.	The scanner will be in Standby. Change the conveyor switch on the scanner to Stop. Change the exit tunnel conveyor switch to Off to stop the conveyor.	Both conveyors should be stopped.
3.	On the GUI dropdown screen, select diagnostic, followed by Radiation Survey. A radiation survey window will appear. Click "Turn On" button to turn x-rays on. Turn on x-rays prompt will say "Place survey bag on belt". Place IQTK bag on Entry Conveyor Belt.	A window indicating "Radiation Survey" will appear.
4.	When "Bag in survey position" appears, go to the FCC monitor and select "2" then <Enter>, verify and record the voltage and current in the displayed on the FCC screen in the planks provided above.	The high voltage is between 144KV and 176KV. The current is between 8.8mA and 10.6mA and the scanner X-ray indicator lights are on.
5.	Survey one of the areas indicated by the boxes in Appendix A2. Record the highest reading within the area. Repeat the process until all areas are surveyed and readings are recorded.	As the survey is conducted, the radiation meter indicates the degree of radiation emission.
6.	Review all radiation data sheets for high readings.	Readings shall not exceed 350 uR/hr in any box.
7.	After radiation survey is complete, click on "Start Conveyor" button on the GUI. Click the "Turn Off" button to turn off x-rays. Next click "Done". The IQTK bag will eject from exit tunnel. EDAC will reboot.	IQTK bag is ejected and scanner reboots.
7.	Visually inspect the entrance and exit of the system for X-ray caution hazard signs.	X-ray hazard signs reading "Do not insert any part of the body when system is energized" are posted at entrance and exit of system.
9.	Fill out the eXaminer radiation stickers and place on the eXaminer in accordance with Examiner Technical Bulletin ex253.	Readings shall not exceed 350 uR/hr in any box.

RADIATION SURVEY WORKSHEET

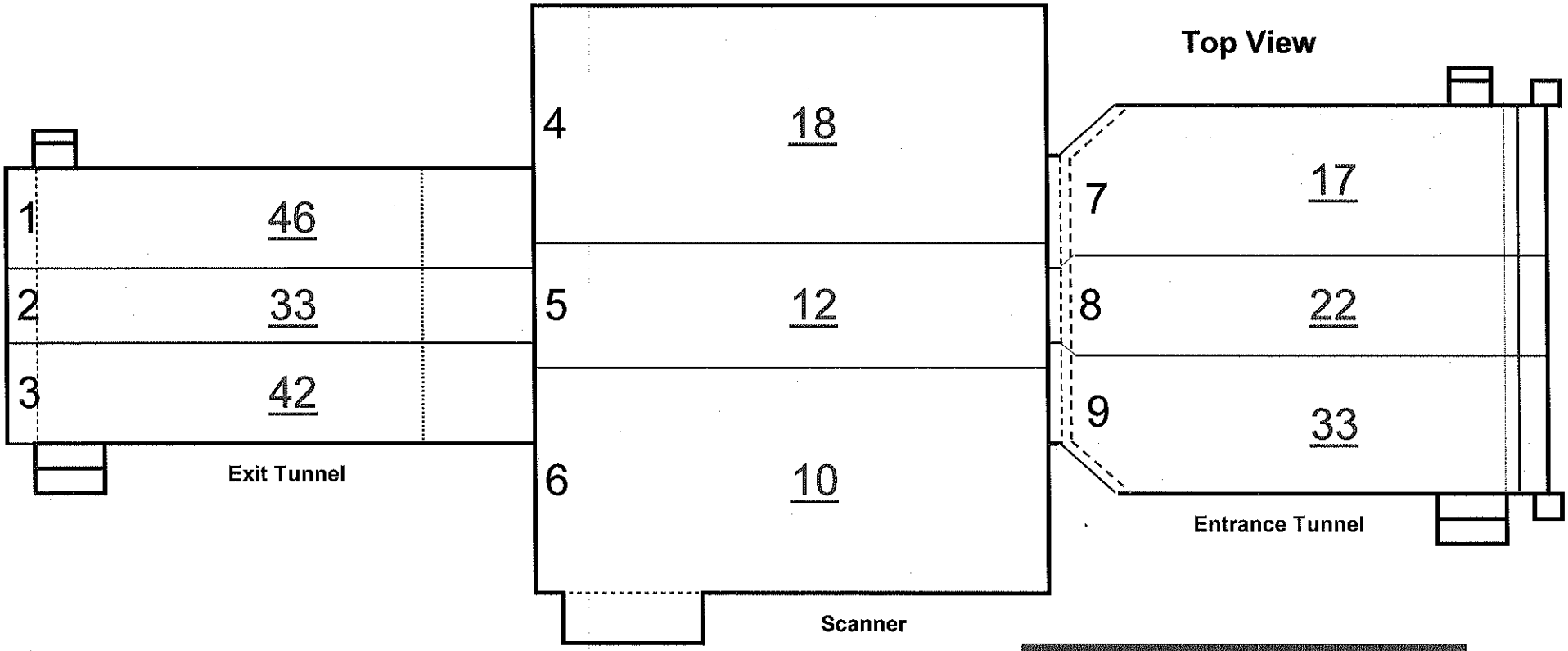

GOOD

Top View			
Scattered Radiation Measurement Points Worksheet			No PROBLEM
Record highest reading per panel		µR/Hr	
1	Exit Conveyor Top Panel	46	
2	Exit Conveyor Top Panel	33	
3	Exit Conveyor Top Panel	42	
4	Scanner Conveyor Top Panel	18	
5	Scanner Conveyor Top Panel	12	
6	Scanner Conveyor Top Panel	10	
7	Entrance Conveyor Top Panel	17	
8	Entrance Conveyor Top Panel	22	
9	Entrance Conveyor Top Panel	33	

Highest Reading	46
Average Reading	26
Lowest Reading	10

RADIATION SURVEY WORKSHEET

SIDE PROFILE VIEW (OPPOSITE AC)

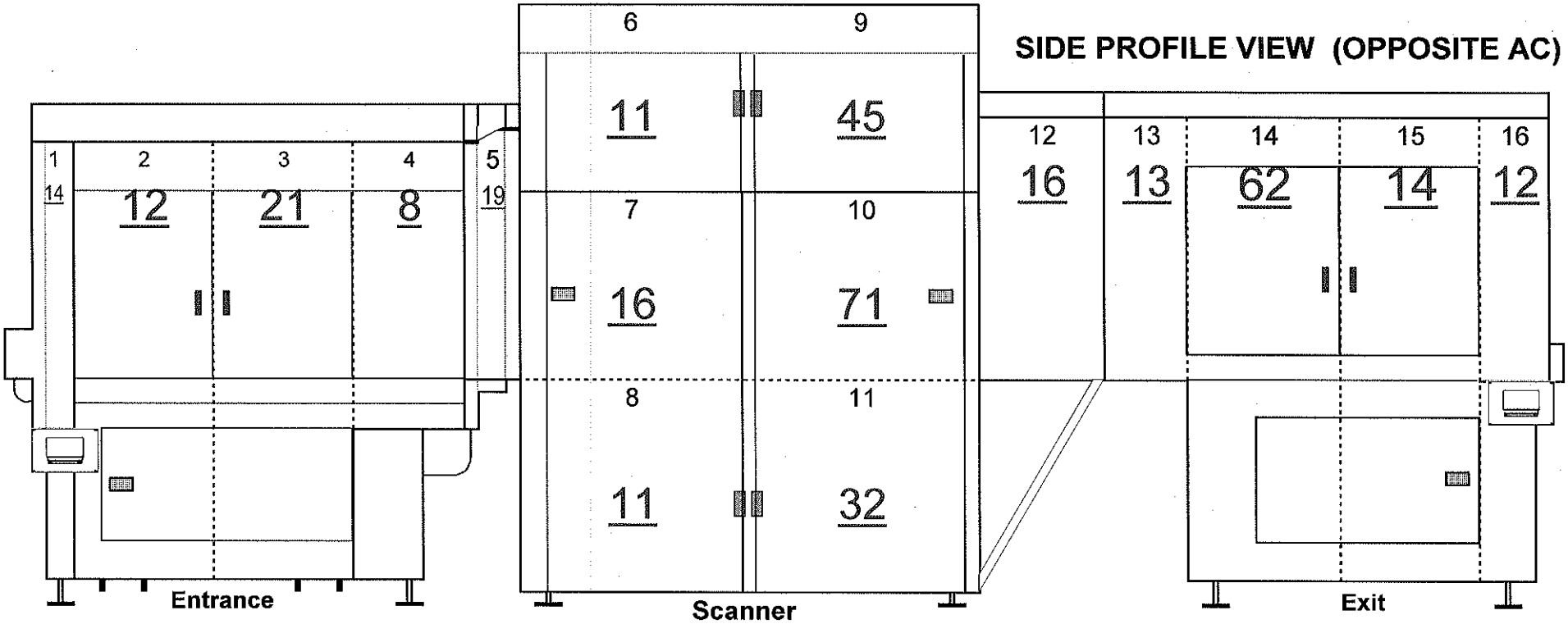

SYSTEM - SIDE PROFILE VIEW (Opposite AC Side)			
Scattered Radiation Measurement Points Worksheet			No PROBLEM
	Record highest reading per panel	µR/Hr	
1	Entrance Conveyor Panel	14	
2	Entrance Conveyor Panel	12	
3	Entrance Conveyor Panel	21	
4	Entrance Conveyor Panel	8	
5	Entrance Conveyor / Scanner Panel	19	
6	Upper Scanner Panel	11	
7	Middle Scanner Panel	16	
8	Lower Scanner Panel	11	
9	Upper Scanner Panel	45	
10	Middle Scanner Panel	71	
11	Lower Scanner Panel	32	
12	Exit Conveyor / Scanner Panel	16	
13	Exit Conveyor Panel	13	
14	Exit Conveyor Panel	62	
15	Exit Conveyor Panel	14	
16	Exit Conveyor Panel	12	

GOOD

Highest Reading	71
Average Reading	24
Low Reading	8

RADIATION SURVEY WORKSHEET

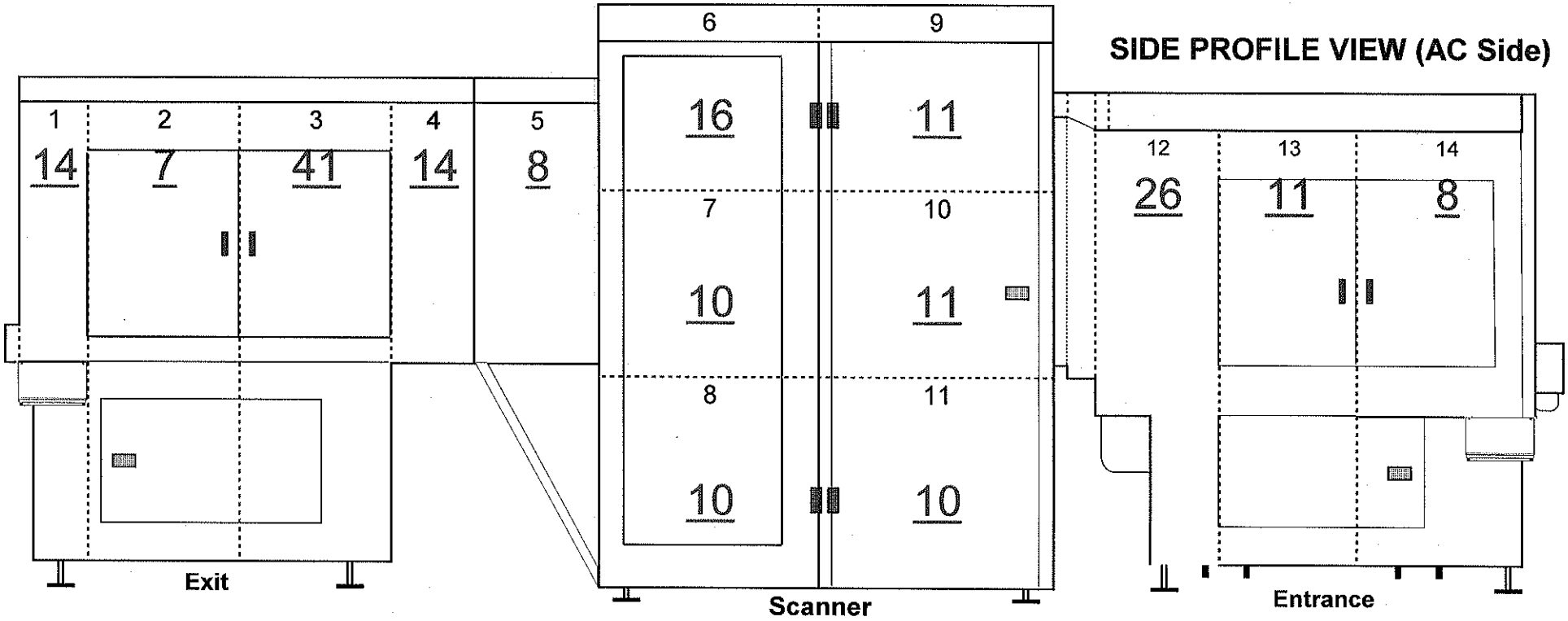

SYSTEM - SIDE PROFILE VIEW (AC Side)			
Scattered Radiation Measurement Points Worksheet			No PROBLEM
	Record highest reading per panel	µR/Hr	
1	Exit Conveyor Panel	14	
2	Exit Conveyor Panel	7	
3	Exit Conveyor Panel	41	
4	Exit Conveyor Panel	14	
5	Exit Conveyor / Scanner Panel	8	
6	Upper Scanner Pane	16	
7	Middle Scanner Panel	10	
8	Lower Scanner Panel	10	
9	Upper Scanner Panel	11	
10	Middle Scanner Panel	11	
11	Lower Scanner Panel	10	
12	Entrance Conveyor / Scanner Panel	26	
13	Entrance Conveyor Panel	11	
14	Entrance Conveyor Panel	8	

GOOD

Highest Reading	41
Average Reading	14
Low Reading	7

RADIATION SURVEY WORKSHEET

SYSTEM - FACES (End Views)

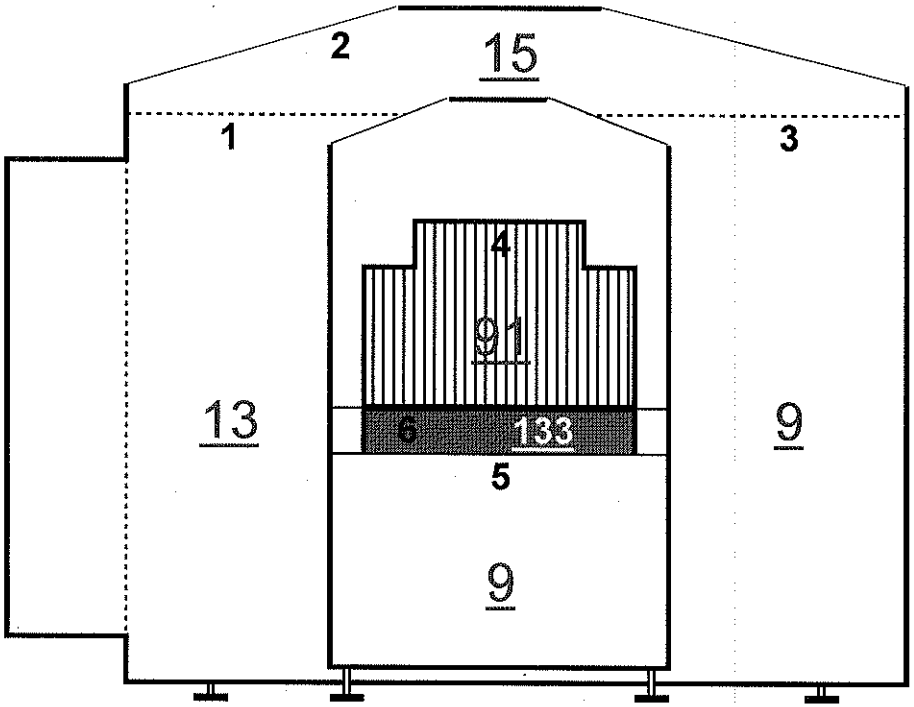

eXaminer entrance

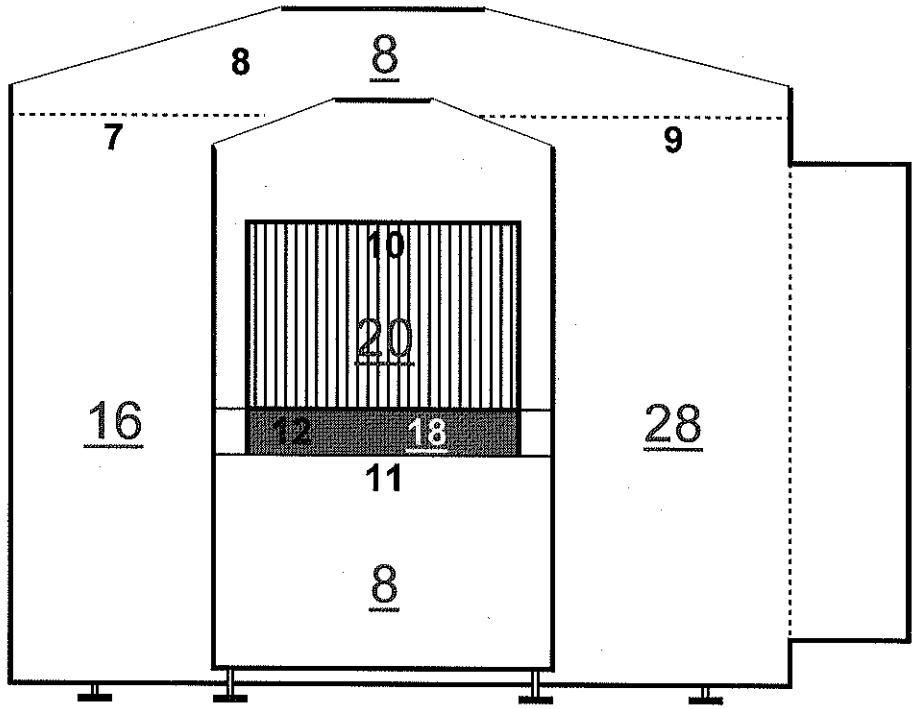

eXaminer exit

SYSTEM - FACES (End Views)			
Scattered Radiation Measurement Points Worksheet			No PROBLEM
Record highest reading per panel		µR/Hr	
1	Scanner Panel	13	
2	Scanner Top Panel	15	
3	Scanner Panel	9	
4	Belt Entrance	91	
5	Entrance Lower Panel	9	
6	Belt Lower Facia Cover Entrance	133	
7	Scanner Panel	16	
8	Scanner Top Panel	8	
9	Scanner Panel	28	
10	Belt Exit	20	
11	Exit Lower Panel	8	
12	Belt Lower Facia Cover Exit	18	

GOOD

Highest Reading	133
Average Reading	31
Low Reading	8