RADIATION SURVEY WORKSHEET

eXaminer Radiation Survey Information

Airport:	*T.F Green Airport*	Scanner Location:	*Baggage Handeling Room*	Case#:	PVD-C324116
Personnel Performing Radiation Survey:	[redacted]			Date Survey Performed:	*9/29/2010*

Scanner Serial Number:	6757	Entrance Tunnel Serial Number:	*1104*	Exit Tunnel Serial Number:	*1090-1B*
High Reading:	45	High Reading:	194	High Reading:	92
Average Reading:	16.95	Average Reading:	43.03	Average Reading:	28.17
Min. Reading:	4	Min. Reading:	9	Min. Reading:	6
Good		Good		Good	

Radiation Meter:	Type Meter:	451P	Meter Serial Number:	6230	Calibration Due Date:	*December 22, 2010*

NOTES

Complete Radiation Survey (CRS)	Record Voltage and Bean Current here:					
Rename this Document before starting the Survey to:	Voltage:	165	KV	Beam Current:	10.0	mA
PVD-CRS-29SEP2010-6757	**Maximum Safe Readings**	**Scanner**	350	**Tunnels**	350	**Curtains** 350

Step:	Procedure	Expected results
1.	Set Up: Obtain Inovision Ion Chamber Survey Meter and in an area away from the scanners, turn on the meter by pressing the On-Off key. Wait approx. 4 minutes for the meter to run through the initialization procedure.	The GUI will be visible and will indicate Standby. After the radiation meter initialization procedure is complete the meter will be reading less than 20 µR/hr and the meter will be ready for use.
2.	The scanner will be in Standby. Change the conveyor switch on the scanner to Stop. Change the exit tunnel conveyor switch to Off to stop the conveyor.	Both conveyors should be stopped.
3.	On the GUI dropdown screen, select diagnostic, followed by Radiation Survey. A radiation survey window will appear. Click "Turn On" button to turn x-rays on. Turn on x-rays prompt will say "Place survey bag on belt". Place IQTK bag on Entry Conveyor Belt.	A window indicating "Radiation Survey" will appear.
4.	When "Bag in survey position" appears, go to the FCC monitor and select "2" then <Enter>, verify and record the voltage and current in the displayed on the FCC screen in the planks provided above.	The high voltage is between 144KV and 176KV. The current is between 8.8mA and 10.6mA and the scanner X-ray indicator lights are on.
5.	Survey one of the areas indicated by the boxes in Appendix A2. Record the highest reading within the area. Repeat the process until all areas are surveyed and readings are recorded.	As the survey is conducted, the radiation meter indicates the degree of radiation emission.
6.	Review all radiation data sheets for high readings.	Readings shall not exceed 350 uR/hr in any box.
7.	After radiation survey is complete, click on "Start Conveyor" button on the GUI. Click the "Turn Off" button to turn off x-rays. Next click "Done". The IQTK bag will eject from exit tunnel. EDAC will reboot.	IQTK bag is ejected and scanner reboots.
7.	Visually inspect the entrance and exit of the system for X-ray caution hazard signs.	X-ray hazard signs reading "Do not insert any part of the body when system is energized" are posted at entrance and exit of system.
9.	Fill out the eXaminer radiation stickers and place on the eXaminer in accordance with Examiner Technical Bulletin ex253.	Readings shall not exceed 350 uR/hr in any box.

RADIATION SURVEY WORKSHEET

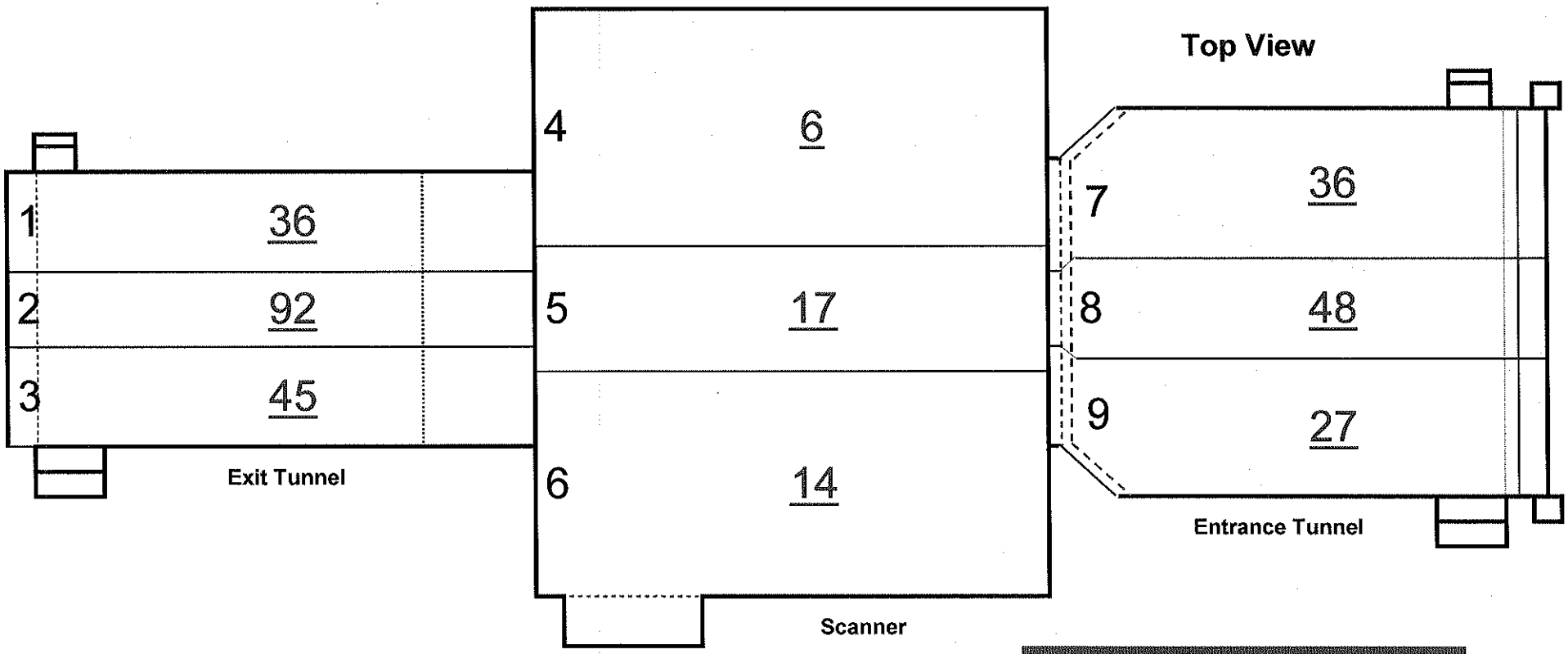

GOOD

Top View			
Scattered Radiation Measurement Points Worksheet			No PROBLEM
Record highest reading per panel		µR/Hr	
1	Exit Conveyor Top Panel	36	
2	Exit Conveyor Top Panel	92	
3	Exit Conveyor Top Panel	45	
4	Scanner Conveyor Top Panel	6	
5	Scanner Conveyor Top Panel	17	
6	Scanner Conveyor Top Panel	14	
7	Entrance Conveyor Top Panel	36	
8	Entrance Conveyor Top Panel	48	
9	Entrance Conveyor Top Panel	27	

Highest Reading	92
Average Reading	36
Lowest Reading	6

RADIATION SURVEY WORKSHEET

SIDE PROFILE VIEW (OPPOSITE AC)

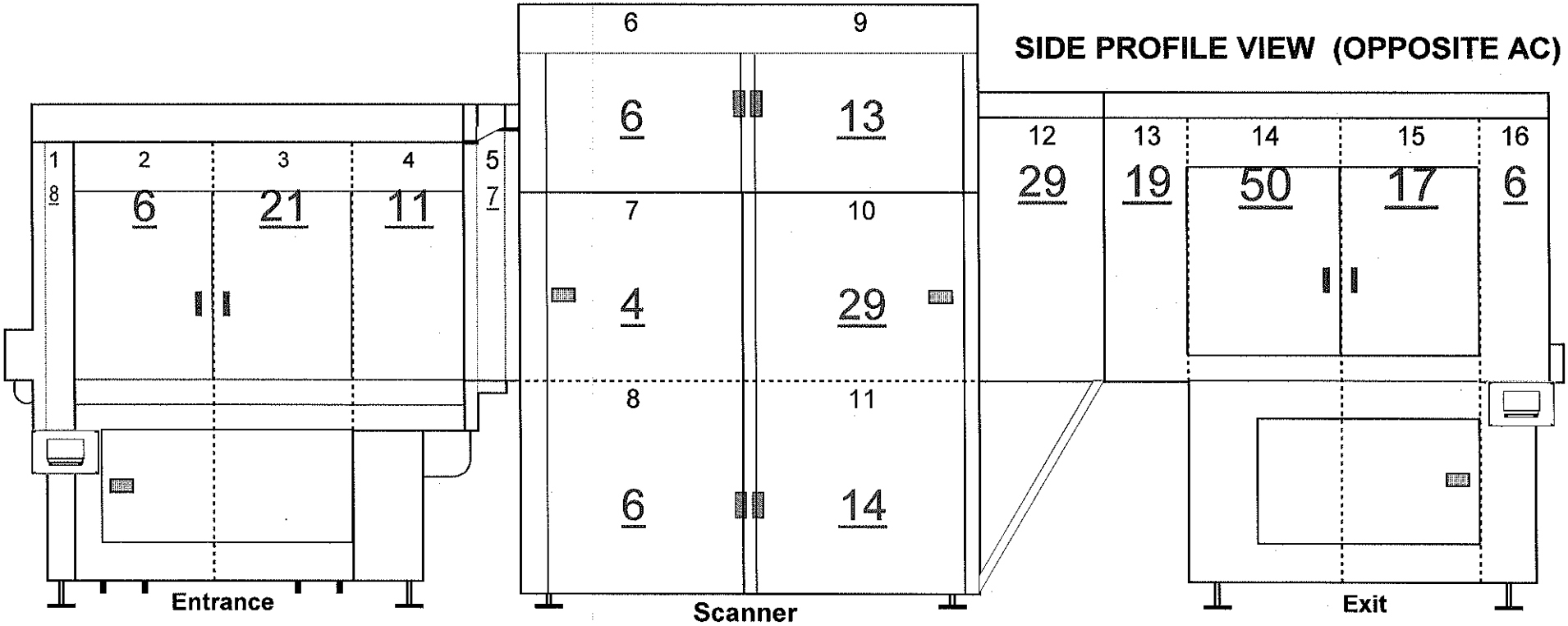

SYSTEM - SIDE PROFILE VIEW (Opposite AC Side)			
Scattered Radiation Measurement Points Worksheet			No PROBLEM
	Record highest reading per panel	µR/Hr	
1	Entrance Conveyor Panel	8	
2	Entrance Conveyor Panel	6	
3	Entrance Conveyor Panel	21	
4	Entrance Conveyor Panel	11	
5	Entrance Conveyor / Scanner Panel	7	
6	Upper Scanner Panel	6	
7	Middle Scanner Panel	4	
8	Lower Scanner Panel	6	
9	Upper Scanner Panel	13	
10	Middle Scanner Panel	29	
11	Lower Scanner Panel	14	
12	Exit Conveyor / Scanner Panel	29	
13	Exit Conveyor Panel	19	
14	Exit Conveyor Panel	50	
15	Exit Conveyor Panel	17	
16	Exit Conveyor Panel	6	

GOOD

Highest Reading	50
Average Reading	15
Low Reading	4

RADIATION SURVEY WORKSHEET

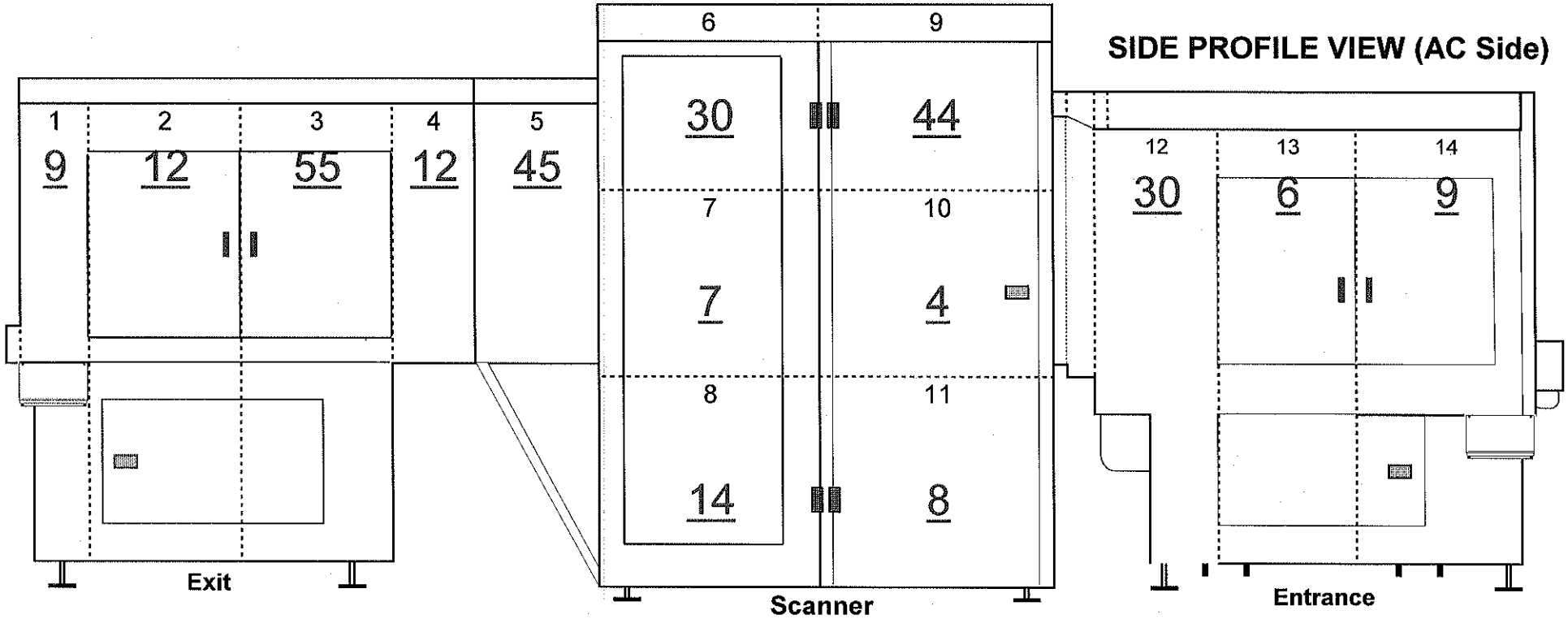

SYSTEM - SIDE PROFILE VIEW (AC Side)			
Scattered Radiation Measurement Points Worksheet			No PROBLEM
Record highest reading per panel		µR/Hr	
1	Exit Conveyor Panel	9	
2	Exit Conveyor Panel	12	
3	Exit Conveyor Panel	55	
4	Exit Conveyor Panel	12	
5	Exit Conveyor / Scanner Panel	45	
6	Upper Scanner Pane	30	
7	Middle Scanner Panel	7	
8	Lower Scanner Panel	14	
9	Upper Scanner Panel	44	
10	Middle Scanner Panel	4	
11	Lower Scanner Panel	8	
12	Entrance Conveyor / Scanner Panel	30	
13	Entrance Conveyor Panel	6	
14	Entrance Conveyor Panel	9	

GOOD

Highest Reading	55
Average Reading	20
Low Reading	4

RADIATION SURVEY WORKSHEET

SYSTEM - FACES (End Views)

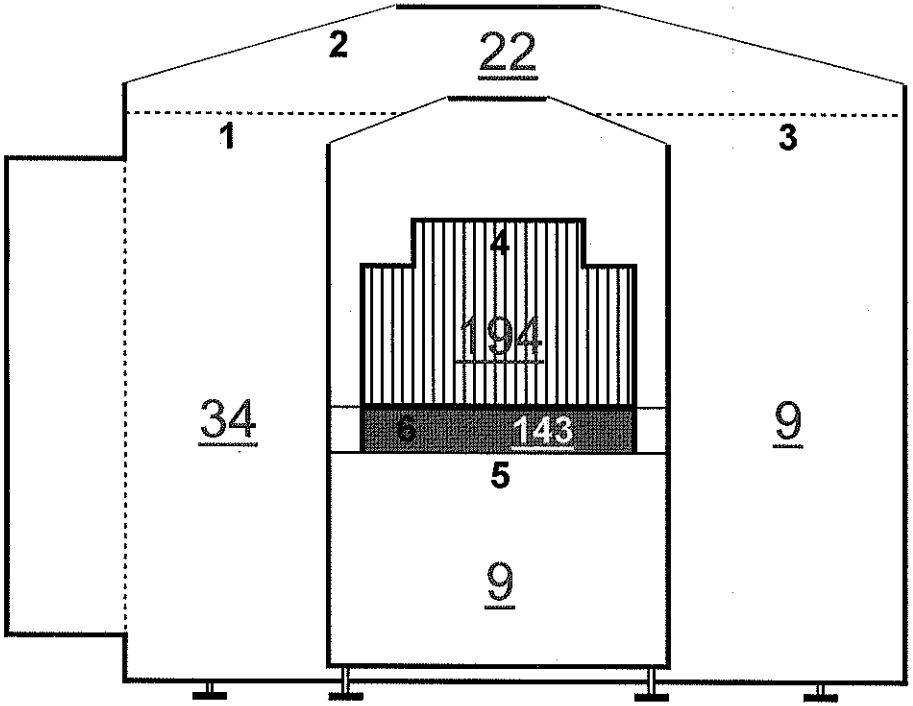

eXaminer entrance

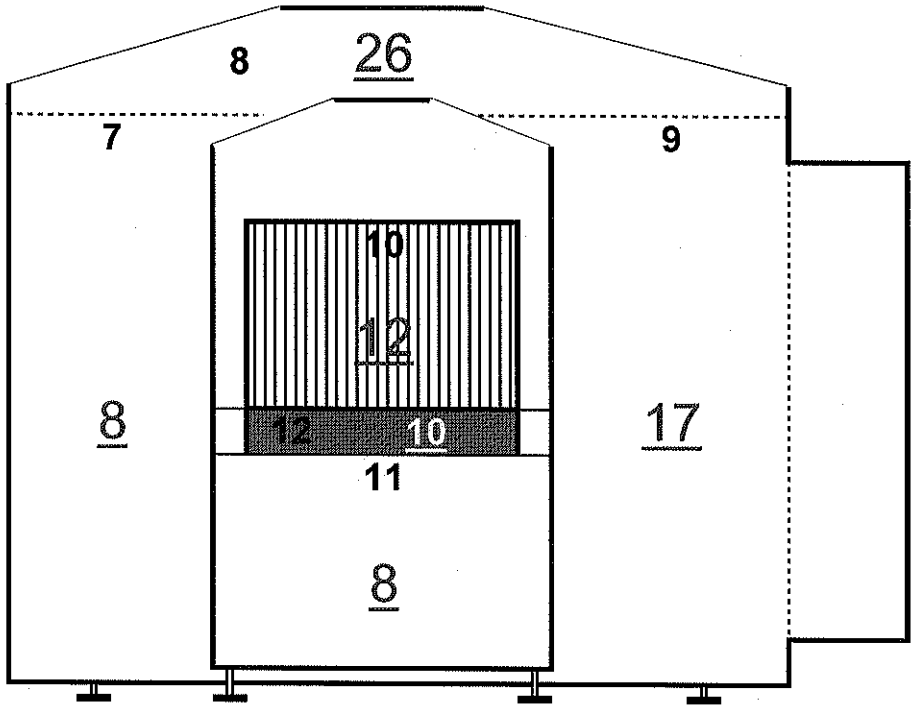

eXaminer exit

SYSTEM - FACES (End Views)			
Scattered Radiation Measurement Points Worksheet			No PROBLEM
Record highest reading per panel		µR/Hr	
1	Scanner Panel	34	
2	Scanner Top Panel	22	
3	Scanner Panel	9	
4	Belt Entrance	194	
5	Entrance Lower Panel	9	
6	Belt Lower Facia Cover Entrance	143	
7	Scanner Panel	8	
8	Scanner Top Panel	26	
9	Scanner Panel	17	
10	Belt Exit	12	
11	Exit Lower Panel	8	
12	Belt Lower Facia Cover Exit	10	

GOOD

Highest Reading	194
Average Reading	41
Low Reading	8