[redacted]

CTX 9000 DSi Radiation Emissions Survey

1.0 Name and Address of Facility and Specific Location of X-ray System

A.	Name of Facility	DFW
B.	FDA Region	Not Applicable
C.	Street Number/Name, R.R. Number or Airline/Airport	DFW Airport
D.	City	Dallas Ft. Worth
E.	State	TX
F.	Zip Code	75261
G.	Telephone Number	[redacted]
H.	Certification Label Present	Yes
I.	Instruments (Model Type and Serial Number)	Model Type 451P-RYR Serial Number 2621
J.	Meter Calibration Date	(Previous) 17-Mar-11

1.1 Manufacturer and Product ID

A.	Manufacturer (Responsible Firm)	Morpho Detection, Inc.
B.	Manufacturer Code	Not Applicable
C.	System Model Number and/or Name	CTX 9000 DSi
D.	Unique ID	Not Applicable
E.	System Serial Number	G818
F.	Date of Manufacture (Month/Year)	Mar-09

1.2 (Not Used)

1.3 Operator Instructions Available Yes

1.4 Maintenance Schedule Available Yes

2.0 Warning Label Indicators

A.	Warning Label Present at Controls Stating "Caution: X-rays Produced when Energized"	Yes
B.	Warning Label Present at Ports Stating "Caution: Do Not Insert Any Part of the Body When System is Energized: X-ray Hazard"	Yes
C.	Two Indicators Labeled "X-ray On" Present at Controls (One May be Labeled "mA Meter")	Yes

Note: The two indicators for InVision Technologies' systems for "X-ray On" at the controls are the red lamp on the console and the x-ray indicator on the SP monitor.

D.	At Least One Indicator, Marked "X-ray On" Visible From Each Port, Door and Access Panel	Yes

[redacted]

[redacted]

3.0 Interlocks

A.	"Captured Key" Control	Yes
B.	Door Safety Interlocks:	
	i. Minimum Number of Interlocks Visible at Any One Door	N/A
	ii. At Least One Interlock Dependent on No Moving Part Except Door	N/A
C.	Prevention of X-radiation by Interlocks	
	i. All Doors and Access Panels That Were Tested Prevent Generation of X-radiation	Yes
	ii. Use of X-ray Control Necessary to Resume Operation Following Interruption	Yes

4.0 Ports and/or Apertures

A.	Some Part of the Body Can Be Inserted Through a Port Into the Primary Beam	No
B.	Some Part of the Body Can Be Inserted Into an Aperture	No

5.0 (Not Used)

6.0 Baggage Inspection System

A.	Means Provided to Ensure Operator Presence at the Control Area	No
B.	Means Provided to Operator for Terminating Exposures of Greater than One-Half Second and Preventing Additional Exposures of Less than One-Half Second	Yes

7.0 Radiation Emissions

A.	Scatter Block Description	100499-1
B.	Technical Factors	

CT:	180	kV	15	mA
PSX:	145	kV	2.2	mA

C.	Location and Exposure Levels	
	i. Reasonable Number of Exposures That May be Initiated in One Hour	N/A
	~OR~	
	ii. Duty Cycle of System Indicated as a Percentage of One Hour	</=100%

[redacted]

[redacted]

8.0 Additional Information

A. P-8 Neon Serial Number 7692, Calibration Date 2/3/11

B. Annual Rad Survey

C.

D.

9.0 Surveyor Information

A. Surveyor Name

User Name: [redacted]
User Domain: MORPHODETECTION.COM
Radiation Survey Client Version: 3.03
Radiation Survey Form Revision: B

First [redacted]
Middle [redacted]
Last [redacted]

Survey Type: Full Survey
Clientele Call #: 336062

☑ **I certify that the information I am submitting on this form is accurate, complete and reflects the true record of the work I performed.** *Date Certified:* *22-Mar-11 9:12:03 PM*

B. Surveyor Signature (Hard Copy Only)

C. Date of Radiation Emissions Survey: 23-Mar-11

D. Surveying Agency Code: Not Applicable

Employees are advised that an inaccurate certification is a violation of GE's Spirit & Letter policies and may result in disciplinary action up to and including termination.

10.0 Remarks

Date Certified: *22-Mar-11 9:12:03 PM*

Status: ✓ Approved | **Date:** 3/23/2011 | **Administrator:** [redacted]

Administrator Comments:

[redacted]

[redacted]

Audit Results:

No Compliance Issues Found.

[redacted]

[redacted]

CTX 9000 DSi PSX ENTRANCE VIEW

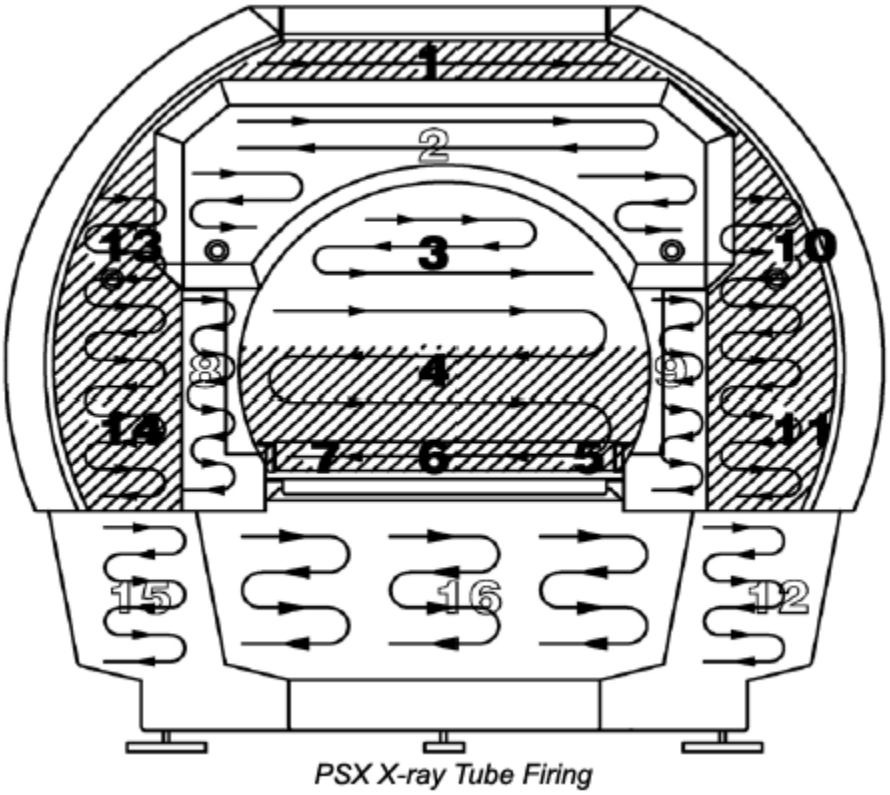

Record the radiation levels as indicated on the table below.

Area #	1	2	3	4	5	6	7	8	9	10	11	12	13	14	15	16
Radiation value in uR/Hr	5	1	2	1	17	5	2	9	8	6	4	5	9	4	2	2

[redacted]

[redacted]

CTX 9000 DSi PSX LEFT SIDE

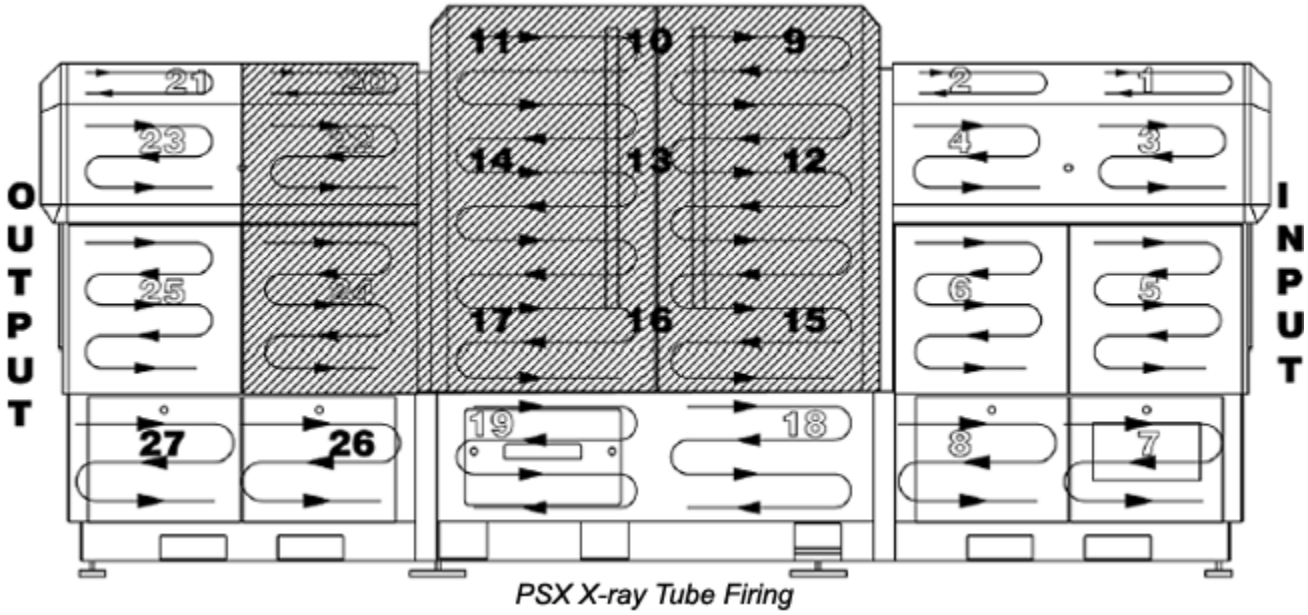

Record the radiation levels as indicated on the table below.

Area #	1	2	3	4	5	6	7	8	9	10	11	12	13	14
Radiation value in uR/Hr	89	89	89	89	89	89	89	89	6	5	3	2	2	4
Area #	15	16	17	18	19	20	21	22	23	24	25	26	27	
Radiation value in uR/Hr	2	3	3	11	8	89	89	89	89	89	89	89	89	

[redacted]

[redacted]

CTX 9000 DSi PSX EXIT VIEW

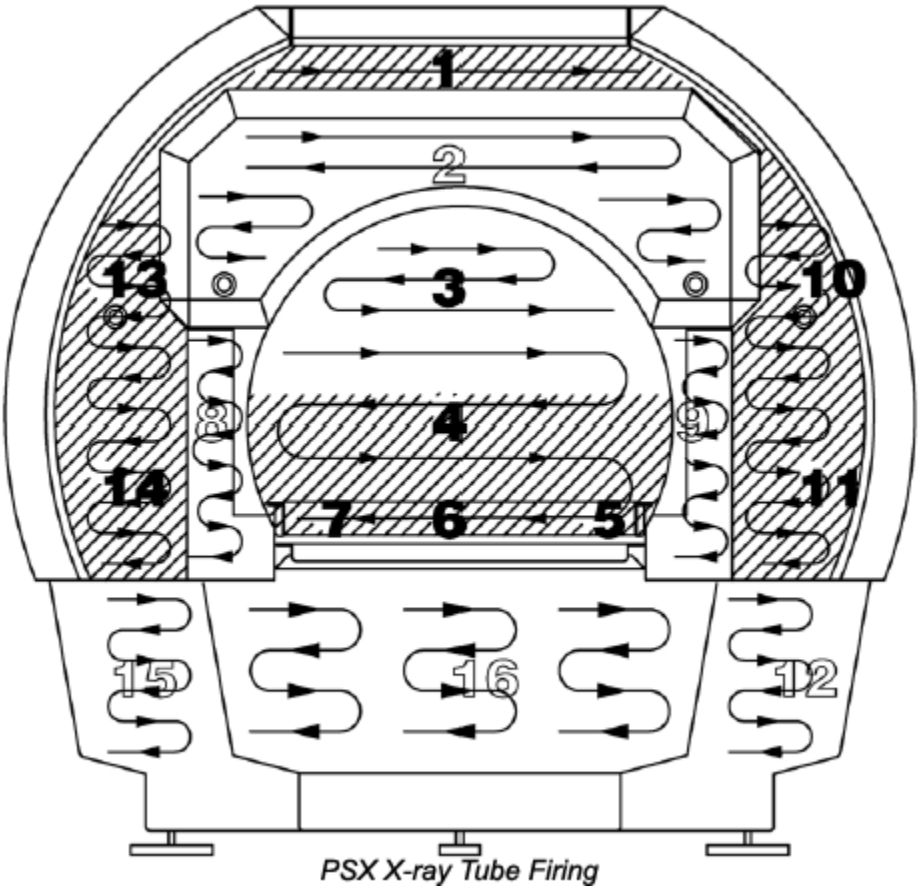

Record the radiation levels as indicated on the table below.

Area #	1	2	3	4	5	6	7	8	9	10	11	12	13	14	15	16
Radiation value in uR/Hr	2	2	2	2	3	1	2	1	9	13	7	3	8	6	3	2

[redacted]

[redacted]

CTX 9000 DSi PSX RIGHT SIDE

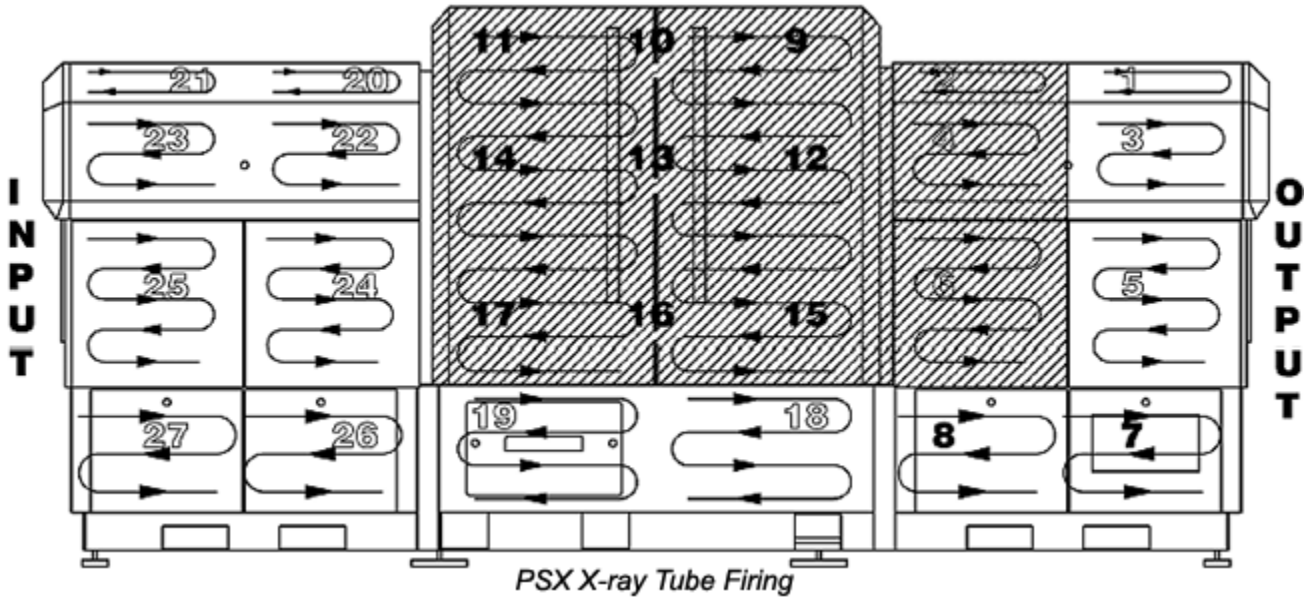

Record the radiation levels as indicated on the table below.

Area #	1	2	3	4	5	6	7	8	9	10	11	12	13	14
Radiation value in uR/Hr	89	89	89	89	89	89	89	89	3	2	6	2	3	2
Area #	15	16	17	18	19	20	21	22	23	24	25	26	27	
Radiation value in uR/Hr	1	3	14	6	8	89	89	89	89	89	89	89	89	

[redacted]

[redacted]

CTX 9000 DSi PSX TOP SIDE

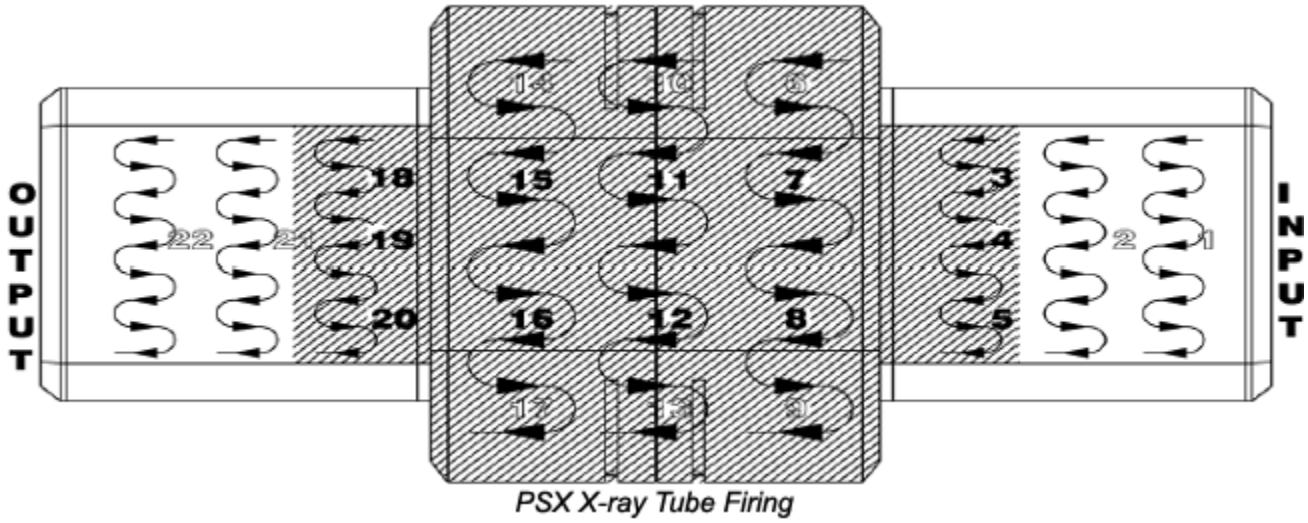

Record the radiation levels as indicated on the table below.

Area #	1	2	3	4	5	6	7	8	9	10	11
Radiation value in uR/Hr	89	89	89	89	89	89	89	89	89	89	89
Area #	12	13	14	15	16	17	18	19	20	21	22
Radiation value in uR/Hr	89	89	89	89	89	89	89	89	89	89	89

[redacted]

[redacted]

CTX 9000 DSi ENTRANCE VIEW

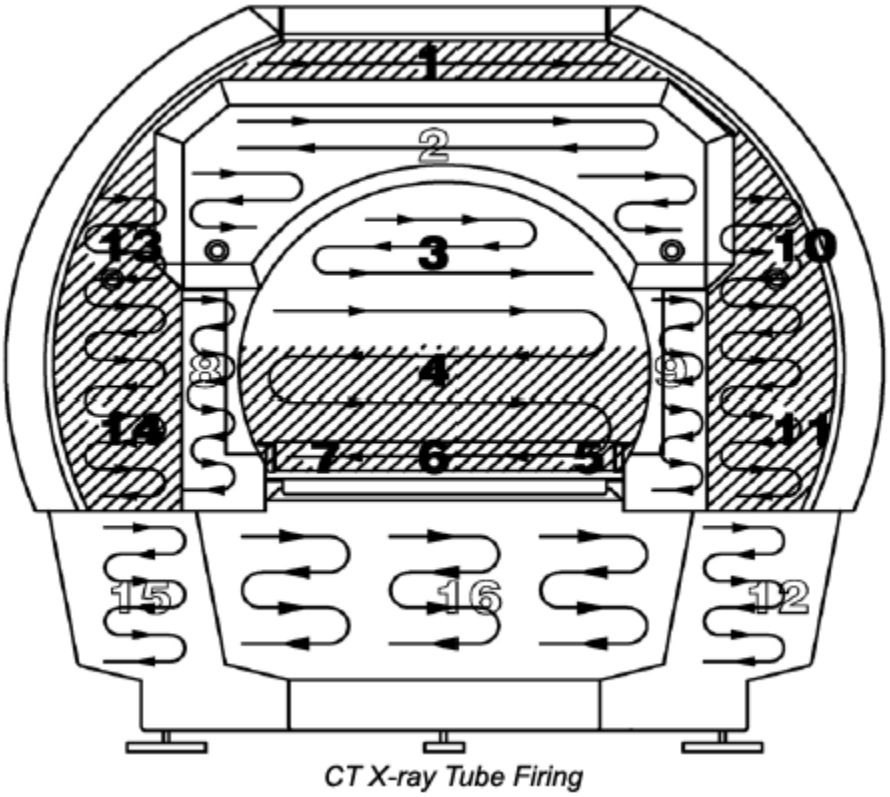

Record the radiation levels as indicated on the table below.

Area #	1	2	3	4	5	6	7	8	9	10	11	12	13	14	15	16
Radiation value in uR/Hr	5	3	30	31	29	29	38	8	11	8	2	4	6	3	1	1

[redacted]

[redacted]

CTX 9000 DSi LEFT SIDE

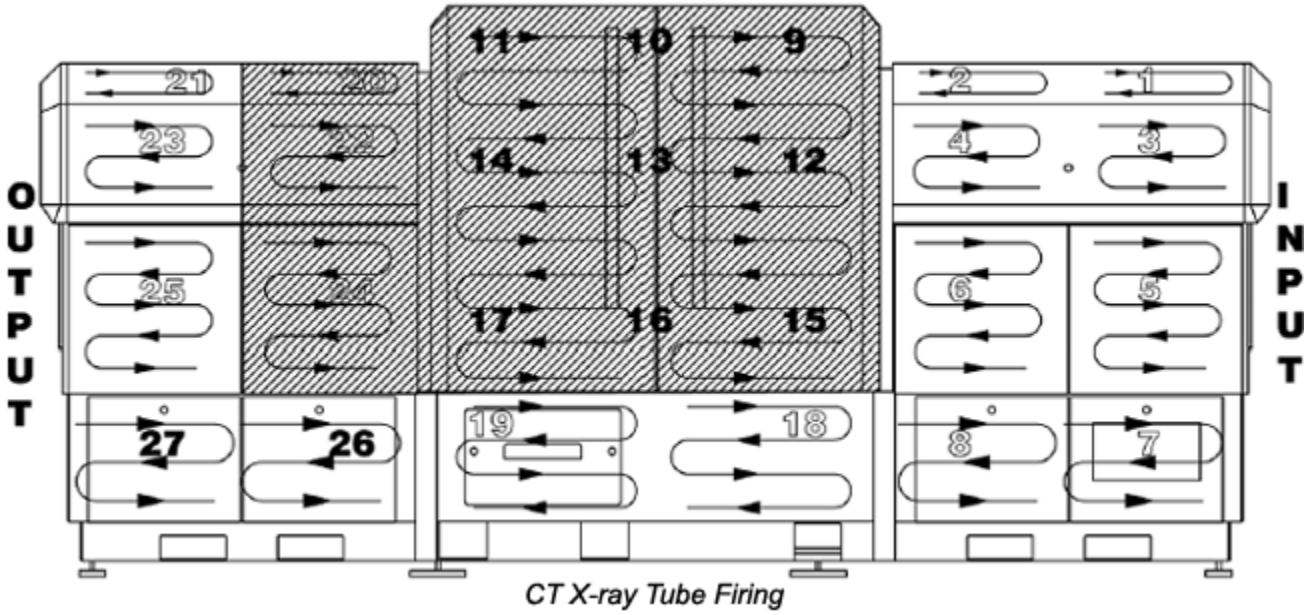

Record the radiation levels as indicated on the table below.

Area #	1	2	3	4	5	6	7	8	9	10	11	12	13	14
Radiation value in uR/Hr	89	89	89	89	89	89	89	89	11	17	6	18	12	8
Area #	15	16	17	18	19	20	21	22	23	24	25	26	27	
Radiation value in uR/Hr	10	14	7	4	1	89	89	89	89	89	89	89	89	

[redacted]

[redacted]

CTX 9000 DSi EXIT VIEW

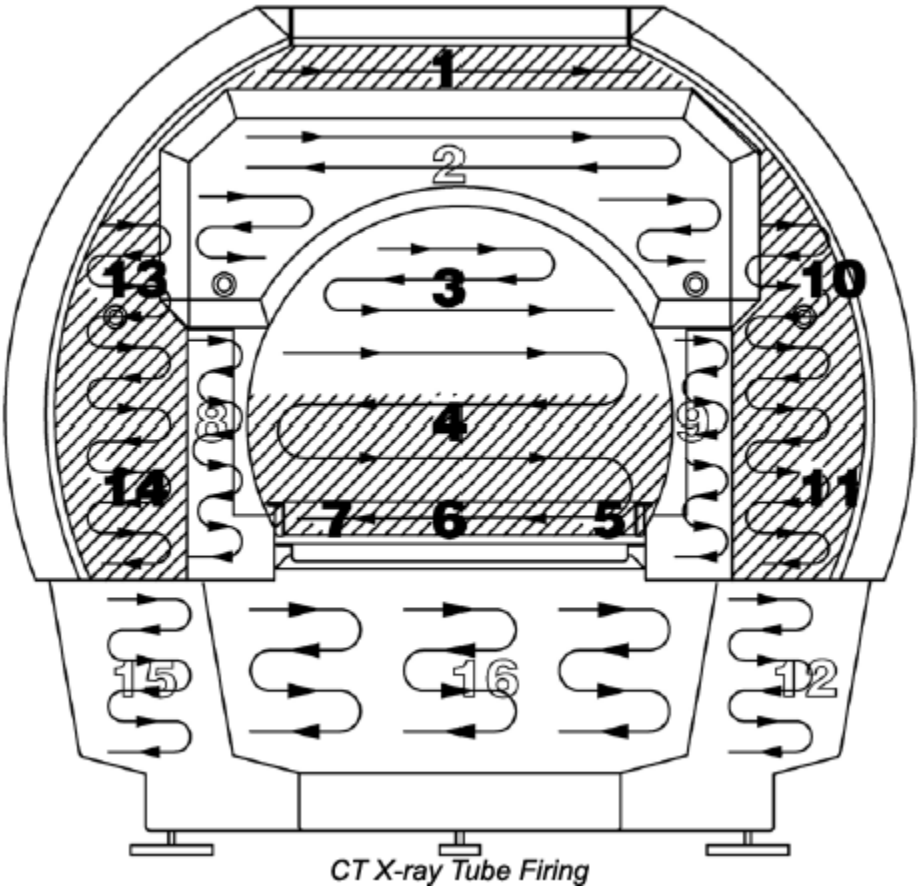

Record the radiation levels as indicated on the table below.

Area #	1	2	3	4	5	6	7	8	9	10	11	12	13	14	15	16
Radiation value in uR/Hr	2	3	38	36	32	38	34	6	12	6	4	5	4	3	2	3

[redacted]

[redacted]

CTX 9000 DSi RIGHT SIDE

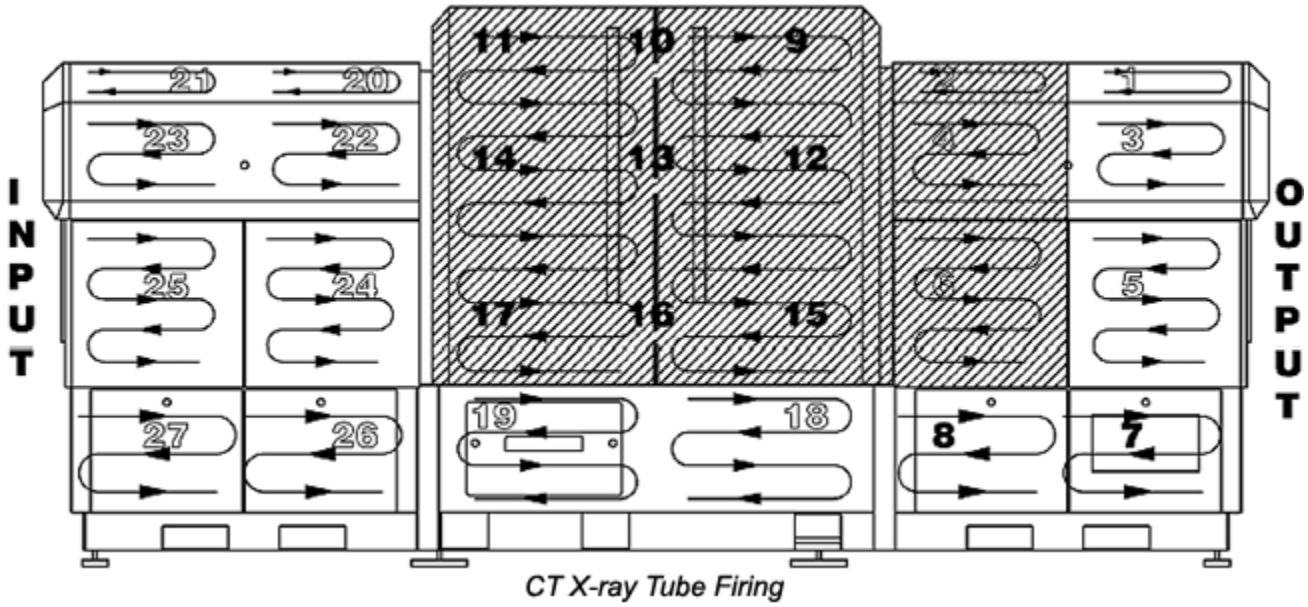

Record the radiation levels as indicated on the table below.

Area #	1	2	3	4	5	6	7	8	9	10	11	12	13	14
Radiation value in uR/Hr	89	89	89	89	89	89	89	89	13	12	14	5	9	21
Area #	15	16	17	18	19	20	21	22	23	24	25	26	27	
Radiation value in uR/Hr	6	4	14	6	2	89	89	89	89	89	89	89	89	

[redacted]

[redacted]

CTX 9000 DSi TOP SIDE

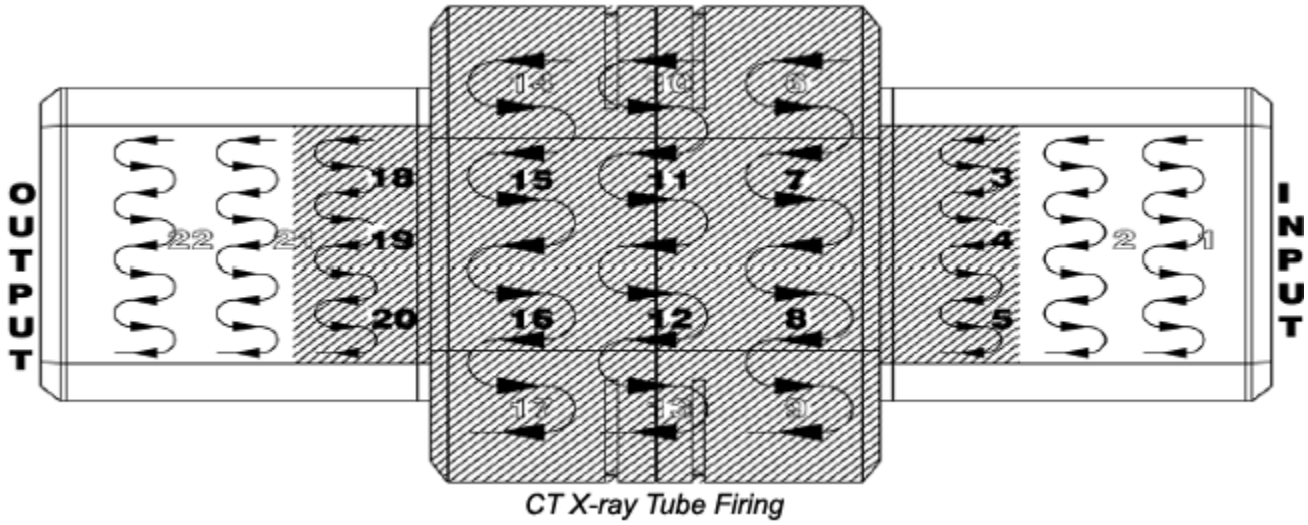

Record the radiation levels as indicated on the table below.

Area #	1	2	3	4	5	6	7	8	9	10	11
Radiation value in uR/Hr	89	89	89	89	89	89	89	89	89	89	89
Area #	12	13	14	15	16	17	18	19	20	21	22
Radiation value in uR/Hr	89	89	89	89	89	89	89	89	89	89	89

[redacted]

[redacted]

CTX 9000 DSi ENTRANCE PORT INNER CURTAIN SURVEY

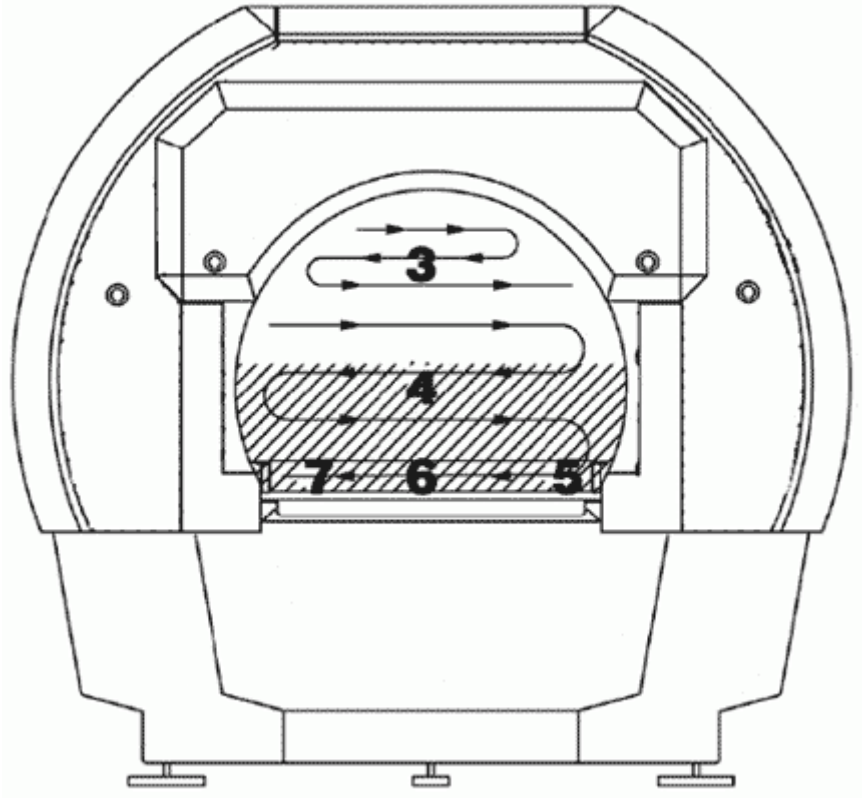

Record the radiation levels as indicated on the table below.

Area #	1	2	3	4	5	6	7
Radiation value in uR/Hr	N/A	N/A	25	41	32	35	33

[redacted]

[redacted]

CTX 9000 DSi EXIT PORT INNER CURTAIN SURVEY

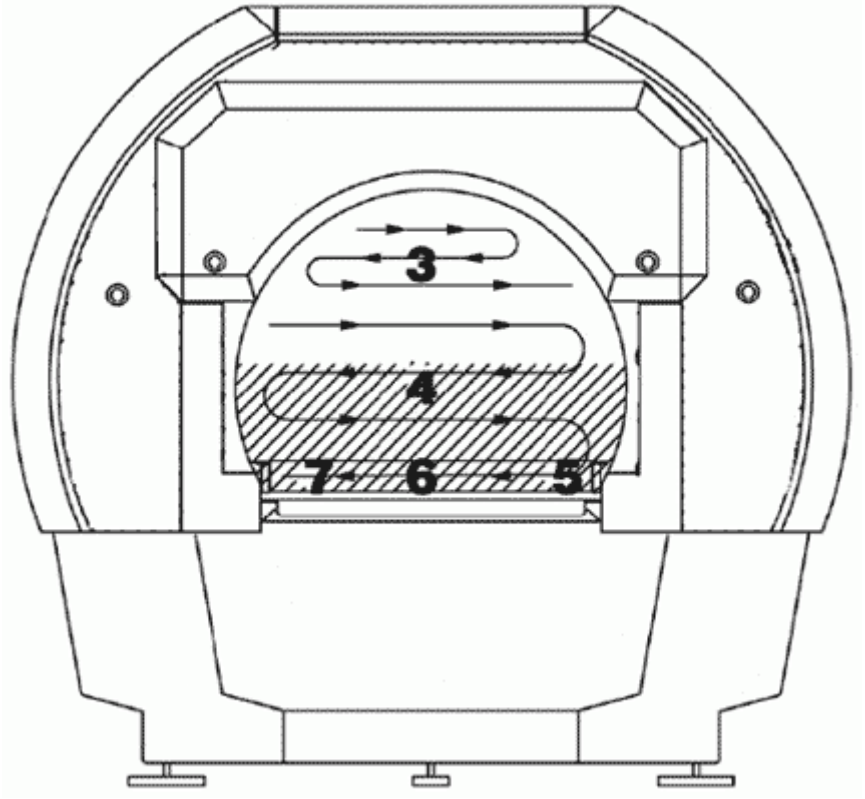

Record the radiation levels as indicated on the table below.

Area #	1	2	3	4	5	6	7
Radiation value in uR/Hr	N/A	N/A	34	57	48	52	43

[redacted]

©Copyright 2003-2011, Morpho Detection, Inc. All Rights Reserved.