[redacted]

# CTX 9000 DSi Radiation Emissions Survey

**1.0 Name and Address of Facility and Specific Location of X-ray System**

| | | |
|---|---|---|
| A. | Name of Facility | DFW |
| B. | FDA Region | Not Applicable |
| C. | Street Number/Name, R.R. Number or Airline/Airport | DFW Airport |
| D. | City | Dallas Ft. Worth |
| E. | State | TX |
| F. | Zip Code | 75261 |
| G. | Telephone Number | [redacted] |
| H. | Certification Label Present | Yes |
| I. | Instruments (Model Type and Serial Number) | Model Type 451P-RYR<br>Serial Number 2621 |
| J. | Meter Calibration Date | (Previous) 17-Mar-11 |

**1.1 Manufacturer and Product ID**

| | | |
|---|---|---|
| A. | Manufacturer (Responsible Firm) | Morpho Detection, Inc. |
| B. | Manufacturer Code | Not Applicable |
| C. | System Model Number and/or Name | CTX 9000 DSi |
| D. | Unique ID | Not Applicable |
| E. | System Serial Number | G819 |
| F. | Date of Manufacture (Month/Year) | Mar-09 |

**1.2 (Not Used)**

**1.3 Operator Instructions Available** Yes

**1.4 Maintenance Schedule Available** Yes

**2.0 Warning Label Indicators**

| | | |
|---|---|---|
| A. | Warning Label Present at Controls Stating "Caution: X-rays Produced when Energized" | Yes |
| B. | Warning Label Present at Ports Stating "Caution: Do Not Insert Any Part of the Body When System is Energized: X-ray Hazard" | Yes |
| C. | Two Indicators Labeled "X-ray On" Present at Controls (One May be Labeled "mA Meter") | Yes |
| D. | At Least One Indicator, Marked "X-ray On" Visible From Each Port, Door and Access Panel | Yes |

**Note:** The two indicators for InVision Technologies' systems for "X-ray On" at the controls are the red lamp on the console and the x-ray indicator on the SP monitor.

[redacted]

[redacted]

**3.0 Interlocks**

| | | |
|---|---|---|
| A. | "Captured Key" Control | Yes |
| B. | Door Safety Interlocks: | |
| | i. Minimum Number of Interlocks Visible at Any One Door | N/A |
| | ii. At Least One Interlock Dependent on No Moving Part Except Door | N/A |
| C. | Prevention of X-radiation by Interlocks | |
| | i. All Doors and Access Panels That Were Tested Prevent Generation of X-radiation | Yes |
| | ii. Use of X-ray Control Necessary to Resume Operation Following Interruption | Yes |

**4.0 Ports and/or Apertures**

| | | |
|---|---|---|
| A. | Some Part of the Body Can Be Inserted Through a Port Into the Primary Beam | No |
| B. | Some Part of the Body Can Be Inserted Into an Aperture | No |

**5.0 (Not Used)**

**6.0 Baggage Inspection System**

| | | |
|---|---|---|
| A. | Means Provided to Ensure Operator Presence at the Control Area | No |
| B. | Means Provided to Operator for Terminating Exposures of Greater than One-Half Second and Preventing Additional Exposures of Less than One-Half Second | Yes |

**7.0 Radiation Emissions**

| | | |
|---|---|---|
| A. | Scatter Block Description | 100499-1 |
| B. | Technical Factors | |

| | | | | |
|---|---|---|---|---|
| CT: | 180 | kV | 15 | mA |
| PSX: | 145 | kV | 2.2 | mA |

| | | |
|---|---|---|
| C. | Location and Exposure Levels | |
| | i. Reasonable Number of Exposures That May be Initiated in One Hour | N/A |
| | ~OR~ | |
| | ii. Duty Cycle of System Indicated as a Percentage of One Hour | </=100% |

[redacted]

[redacted]

**8.0 Additional Information**

A. P-8 Neon Serial Number 7692, Calibration Date 2/3/11

B. Annual Survey

C.

D.

**9.0 Surveyor Information**

A. Surveyor Name

User Name: [redacted]
User Domain: MORPHODETECTION.COM
Radiation Survey Client Version: 3.03
Radiation Survey Form Revision: B

First [redacted]
Middle [redacted]
Last [redacted]

Survey Type: Full Survey
Clientele Call #: 336064

☑ **I certify that the information I am submitting on this form is accurate, complete and reflects the true record of the work I performed.** *Date Certified: 22-Mar-11 4:47:17 PM*

B. Surveyor Signature (Hard Copy Only)

C. Date of Radiation Emissions Survey: 23-Mar-11

D. Surveying Agency Code: Not Applicable

*Employees are advised that an inaccurate certification is a violation of GE's Spirit & Letter policies and may result in disciplinary action up to and including termination.*

**10.0 Remarks**

*Date Certified: 22-Mar-11 4:47:17 PM*

**Status:** ✓ Approved | **Date:** 3/23/2011 | **Administrator:** [redacted]

**Administrator Comments:**

[redacted]

[redacted]

**Audit Results:**

**No Compliance Issues Found.**

[redacted]

[redacted]

## CTX 9000 DSi PSX ENTRANCE VIEW

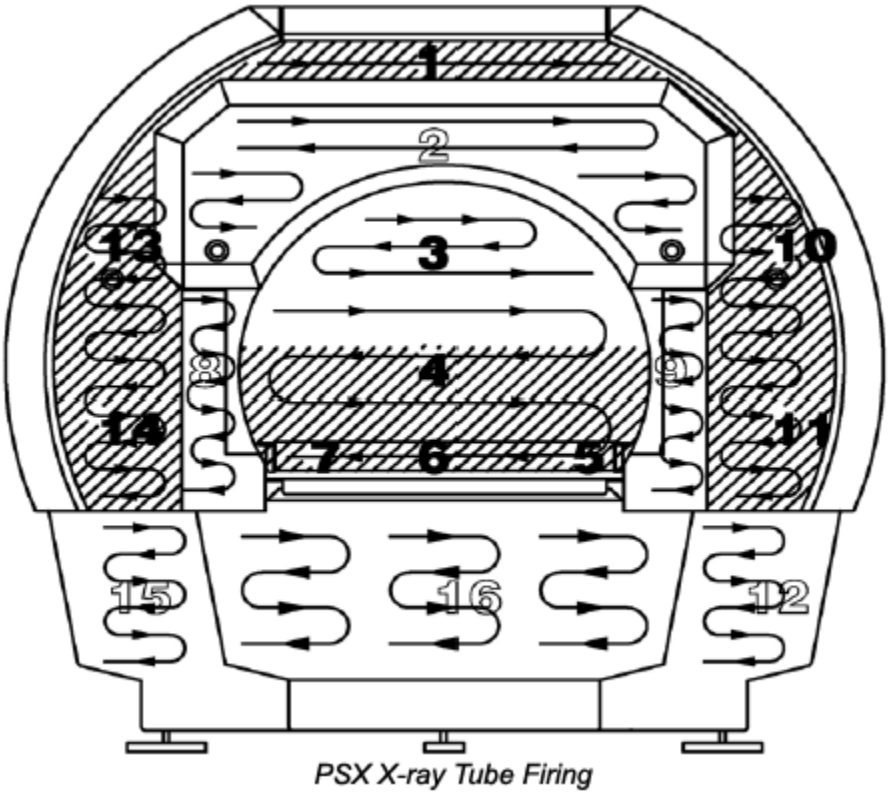


Record the radiation levels as indicated on the table below.

| Area # | 1 | 2 | 3 | 4 | 5 | 6 | 7 | 8 | 9 | 10 | 11 | 12 | 13 | 14 | 15 | 16 |
|---|---|---|---|---|---|---|---|---|---|---|---|---|---|---|---|---|
| Radiation value in uR/Hr | 2 | 3 | 1 | 7 | 6 | 7 | 5 | 4 | 3 | 4 | 5 | 2 | 5 | 4 | 3 | 1 |

[redacted]

[redacted]

## CTX 9000 DSi PSX LEFT SIDE

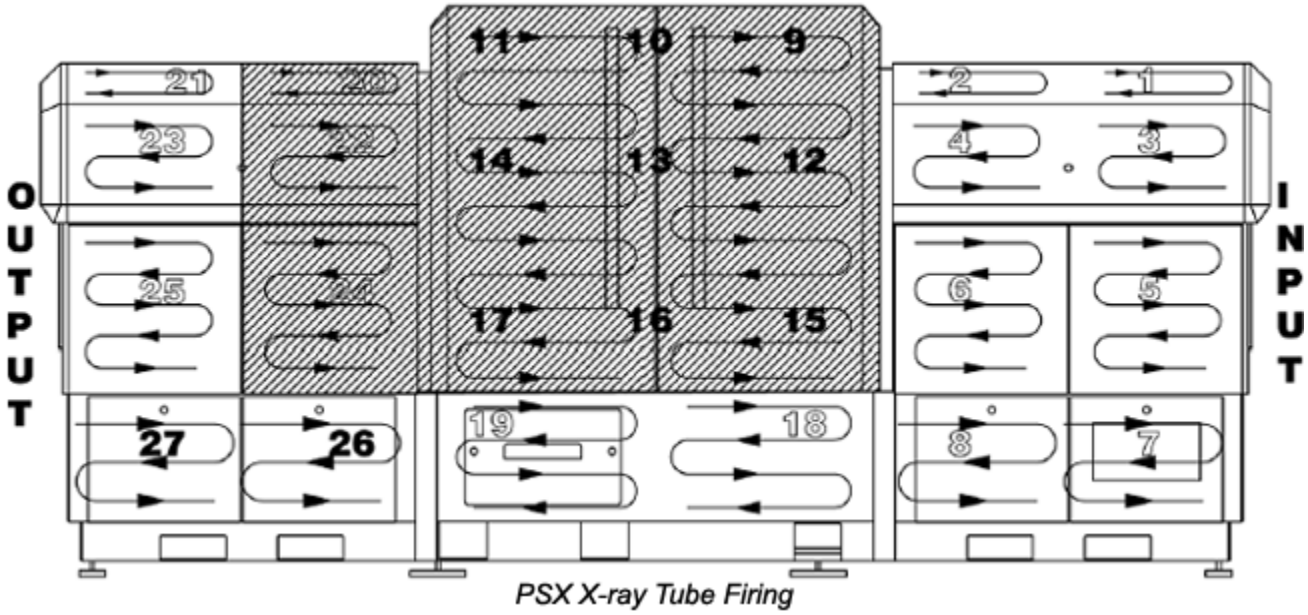


Record the radiation levels as indicated on the table below.

| Area # | 1 | 2 | 3 | 4 | 5 | 6 | 7 | 8 | 9 | 10 | 11 | 12 | 13 | 14 |
|---|---|---|---|---|---|---|---|---|---|---|---|---|---|---|
| Radiation value in uR/Hr | 89 | 89 | 89 | 89 | 89 | 89 | 89 | 89 | 8 | 7 | 7 | 15 | 14 | 10 |
| Area # | 15 | 16 | 17 | 18 | 19 | 20 | 21 | 22 | 23 | 24 | 25 | 26 | 27 | |
| Radiation value in uR/Hr | 9 | 13 | 10 | 5 | 4 | 89 | 89 | 89 | 89 | 89 | 89 | 89 | 89 | |

[redacted]

[redacted]

## CTX 9000 DSi PSX EXIT VIEW

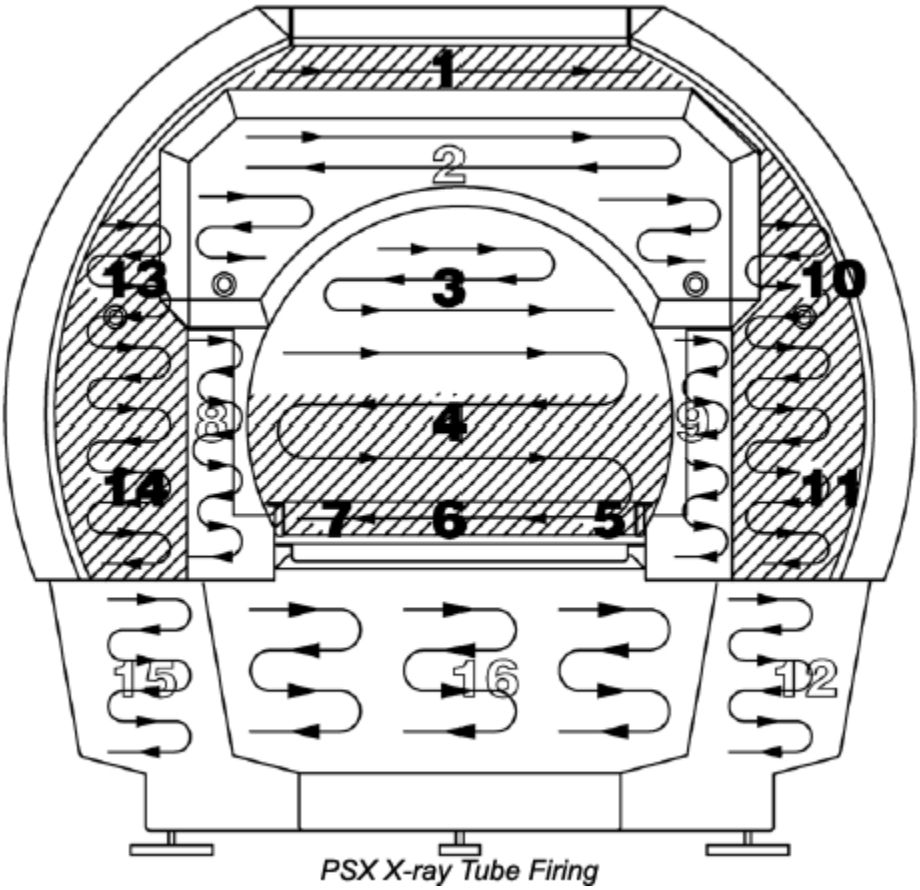


Record the radiation levels as indicated on the table below.

| Area # | 1 | 2 | 3 | 4 | 5 | 6 | 7 | 8 | 9 | 10 | 11 | 12 | 13 | 14 | 15 | 16 |
|---|---|---|---|---|---|---|---|---|---|---|---|---|---|---|---|---|
| Radiation value in uR/Hr | 5 | 3 | 1 | 3 | 2 | 3 | 5 | 4 | 5 | 2 | 3 | 4 | 3 | 2 | 4 | 2 |

[redacted]

[redacted]

## CTX 9000 DSi PSX RIGHT SIDE

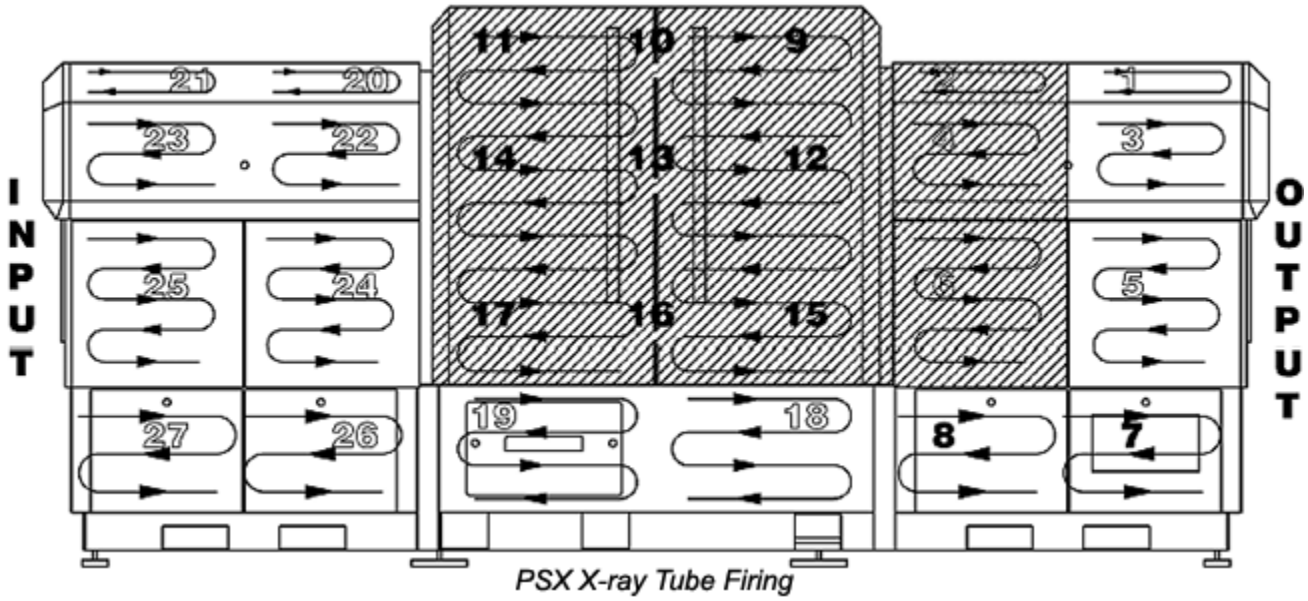


Record the radiation levels as indicated on the table below.

| Area # | 1 | 2 | 3 | 4 | 5 | 6 | 7 | 8 | 9 | 10 | 11 | 12 | 13 | 14 |
|---|---|---|---|---|---|---|---|---|---|---|---|---|---|---|
| Radiation value in uR/Hr | 89 | 89 | 89 | 89 | 89 | 89 | 89 | 89 | 16 | 18 | 21 | 9 | 14 | 10 |
| Area # | 15 | 16 | 17 | 18 | 19 | 20 | 21 | 22 | 23 | 24 | 25 | 26 | 27 | |
| Radiation value in uR/Hr | 15 | 10 | 12 | 5 | 6 | 89 | 89 | 89 | 89 | 89 | 89 | 89 | 89 | |

[redacted]

[redacted]

## CTX 9000 DSi PSX TOP SIDE

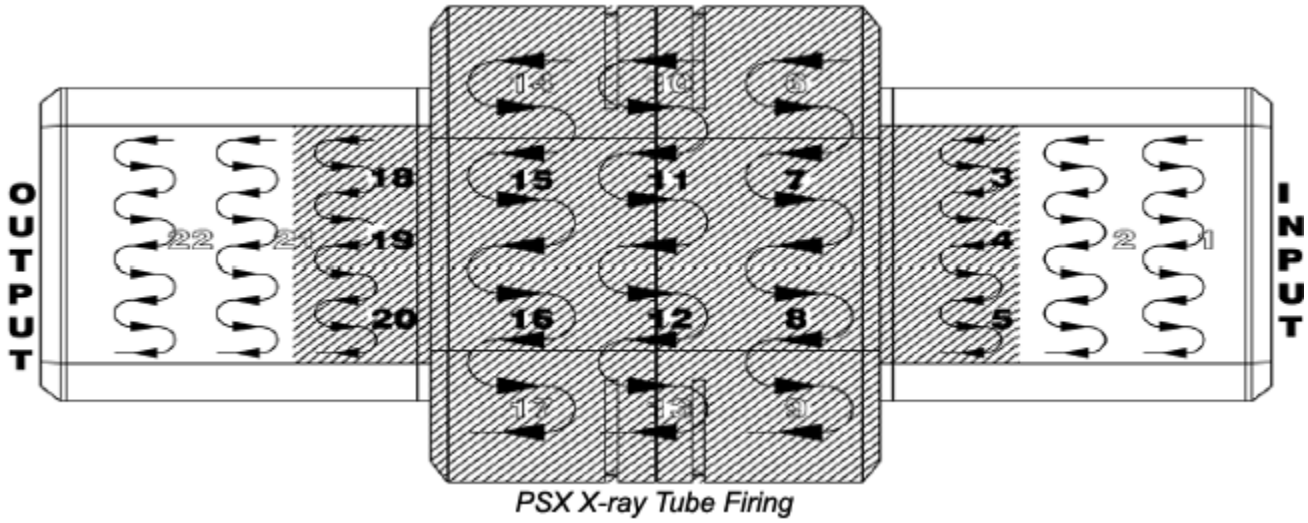


Record the radiation levels as indicated on the table below.

| Area # | 1 | 2 | 3 | 4 | 5 | 6 | 7 | 8 | 9 | 10 | 11 |
|---|---|---|---|---|---|---|---|---|---|---|---|
| Radiation value in uR/Hr | 89 | 89 | 89 | 89 | 89 | 89 | 89 | 89 | 89 | 89 | 89 |
| Area # | 12 | 13 | 14 | 15 | 16 | 17 | 18 | 19 | 20 | 21 | 22 |
| Radiation value in uR/Hr | 89 | 89 | 89 | 89 | 89 | 89 | 89 | 89 | 89 | 89 | 89 |

[redacted]

[redacted]

## CTX 9000 DSi ENTRANCE VIEW

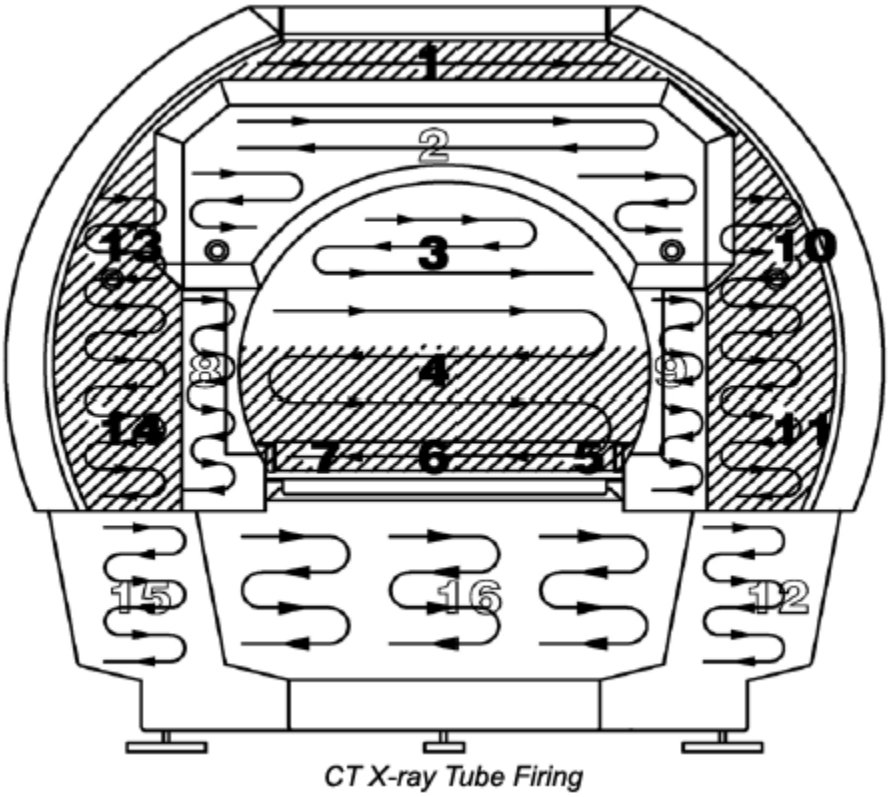


Record the radiation levels as indicated on the table below.

| Area # | 1 | 2 | 3 | 4 | 5 | 6 | 7 | 8 | 9 | 10 | 11 | 12 | 13 | 14 | 15 | 16 |
|---|---|---|---|---|---|---|---|---|---|---|---|---|---|---|---|---|
| Radiation value in uR/Hr | 2 | 3 | 35 | 30 | 25 | 27 | 28 | 6 | 4 | 3 | 4 | 2 | 10 | 5 | 3 | 2 |

[redacted]

[redacted]

## CTX 9000 DSi LEFT SIDE

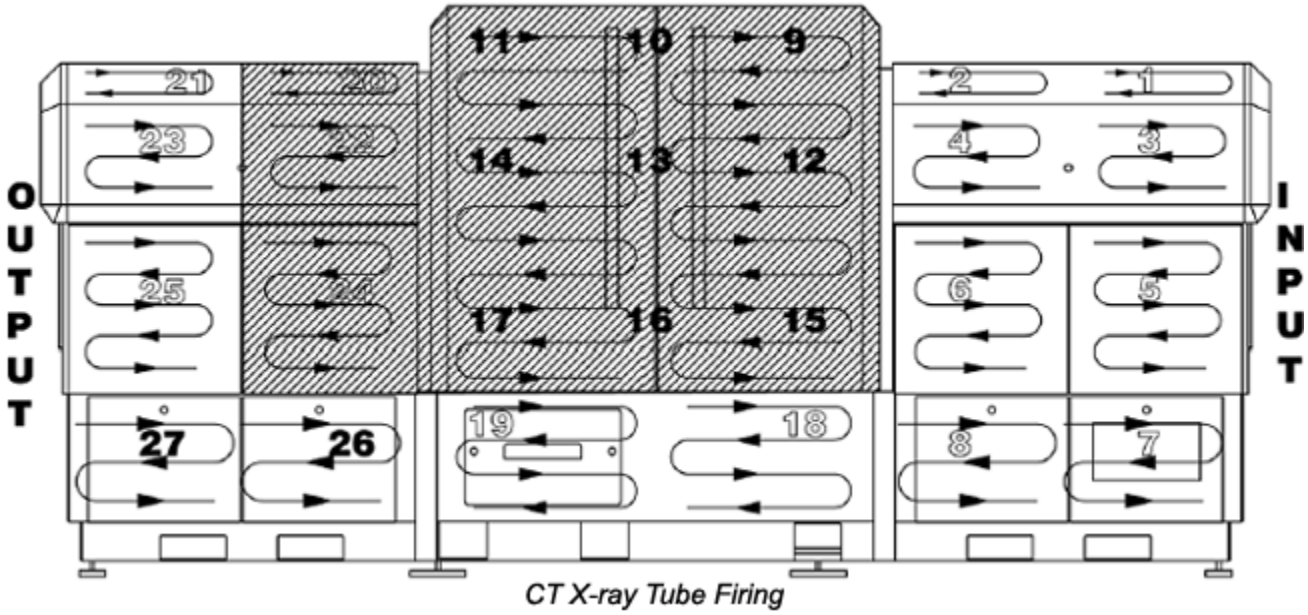


Record the radiation levels as indicated on the table below.

| Area # | 1 | 2 | 3 | 4 | 5 | 6 | 7 | 8 | 9 | 10 | 11 | 12 | 13 | 14 |
|---|---|---|---|---|---|---|---|---|---|---|---|---|---|---|
| Radiation value in uR/Hr | 89 | 89 | 89 | 89 | 89 | 89 | 89 | 89 | 21 | 19 | 26 | 35 | 46 | 39 |
| Area # | 15 | 16 | 17 | 18 | 19 | 20 | 21 | 22 | 23 | 24 | 25 | 26 | 27 | |
| Radiation value in uR/Hr | 31 | 38 | 36 | 10 | 7 | 89 | 89 | 89 | 89 | 89 | 89 | 89 | 89 | |

[redacted]

[redacted]

## CTX 9000 DSi EXIT VIEW

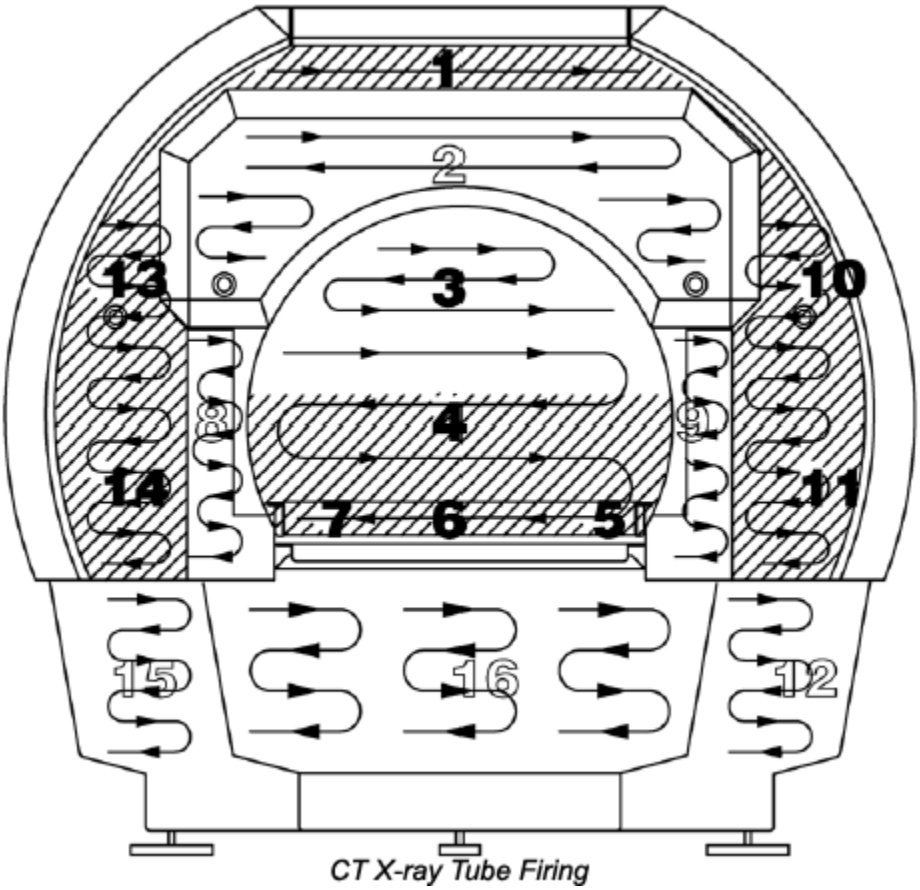


Record the radiation levels as indicated on the table below.

| Area # | 1 | 2 | 3 | 4 | 5 | 6 | 7 | 8 | 9 | 10 | 11 | 12 | 13 | 14 | 15 | 16 |
|---|---|---|---|---|---|---|---|---|---|---|---|---|---|---|---|---|
| Radiation value in uR/Hr | 3 | 1 | 41 | 34 | 26 | 31 | 28 | 2 | 3 | 7 | 9 | 4 | 8 | 7 | 4 | 5 |

[redacted]

[redacted]

## CTX 9000 DSi RIGHT SIDE

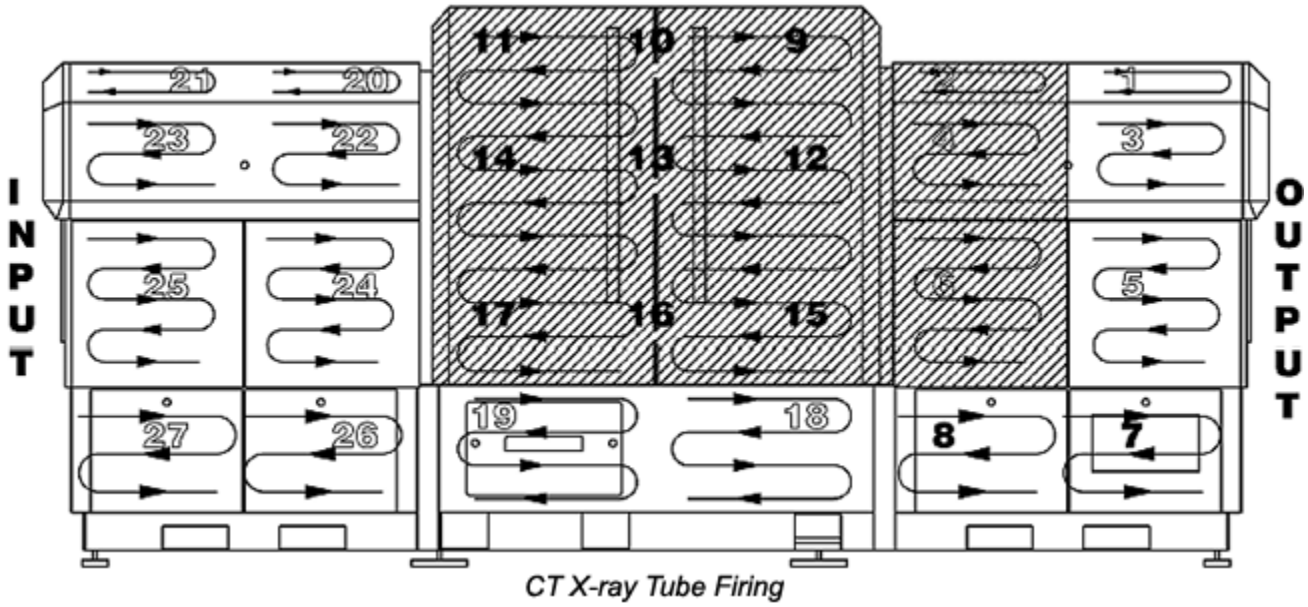


Record the radiation levels as indicated on the table below.

| Area # | 1 | 2 | 3 | 4 | 5 | 6 | 7 | 8 | 9 | 10 | 11 | 12 | 13 | 14 |
|---|---|---|---|---|---|---|---|---|---|---|---|---|---|---|
| Radiation value in uR/Hr | 89 | 89 | 89 | 89 | 89 | 89 | 89 | 89 | 21 | 42 | 12 | 24 | 33 | 12 |
| Area # | 15 | 16 | 17 | 18 | 19 | 20 | 21 | 22 | 23 | 24 | 25 | 26 | 27 | |
| Radiation value in uR/Hr | 36 | 19 | 6 | 9 | 4 | 89 | 89 | 89 | 89 | 89 | 89 | 89 | 89 | |

[redacted]

[redacted]

## CTX 9000 DSi TOP SIDE

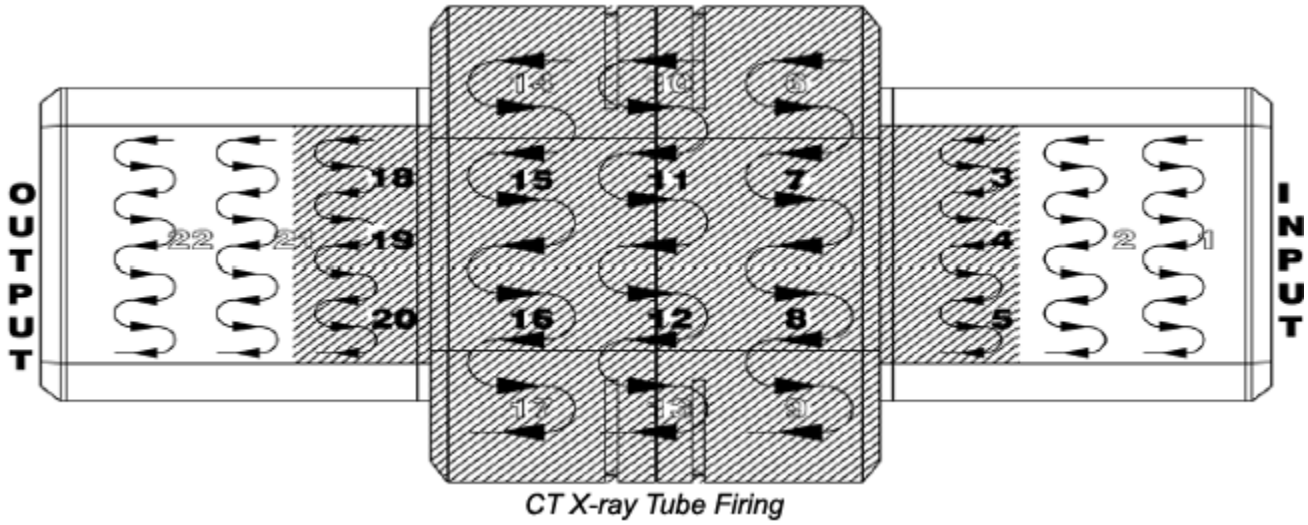


Record the radiation levels as indicated on the table below.

| Area # | 1 | 2 | 3 | 4 | 5 | 6 | 7 | 8 | 9 | 10 | 11 |
|---|---|---|---|---|---|---|---|---|---|---|---|
| Radiation value in uR/Hr | 89 | 89 | 89 | 89 | 89 | 89 | 89 | 89 | 89 | 89 | 89 |
| Area # | 12 | 13 | 14 | 15 | 16 | 17 | 18 | 19 | 20 | 21 | 22 |
| Radiation value in uR/Hr | 89 | 89 | 89 | 89 | 89 | 89 | 89 | 89 | 89 | 89 | 89 |

[redacted]

[redacted]

# CTX 9000 DSi ENTRANCE PORT INNER CURTAIN SURVEY

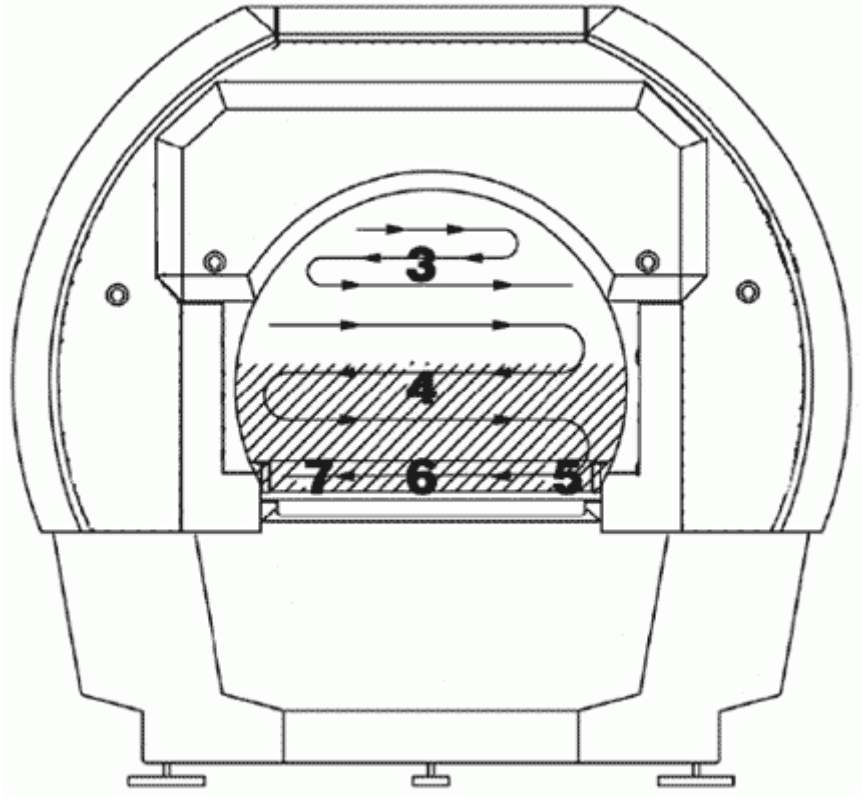


Record the radiation levels as indicated on the table below.

| Area # | 1 | 2 | 3 | 4 | 5 | 6 | 7 |
|---|---|---|---|---|---|---|---|
| Radiation value in uR/Hr | N/A | N/A | 40 | 38 | 35 | 36 | 38 |

[redacted]

[redacted]

# CTX 9000 DSi EXIT PORT INNER CURTAIN SURVEY

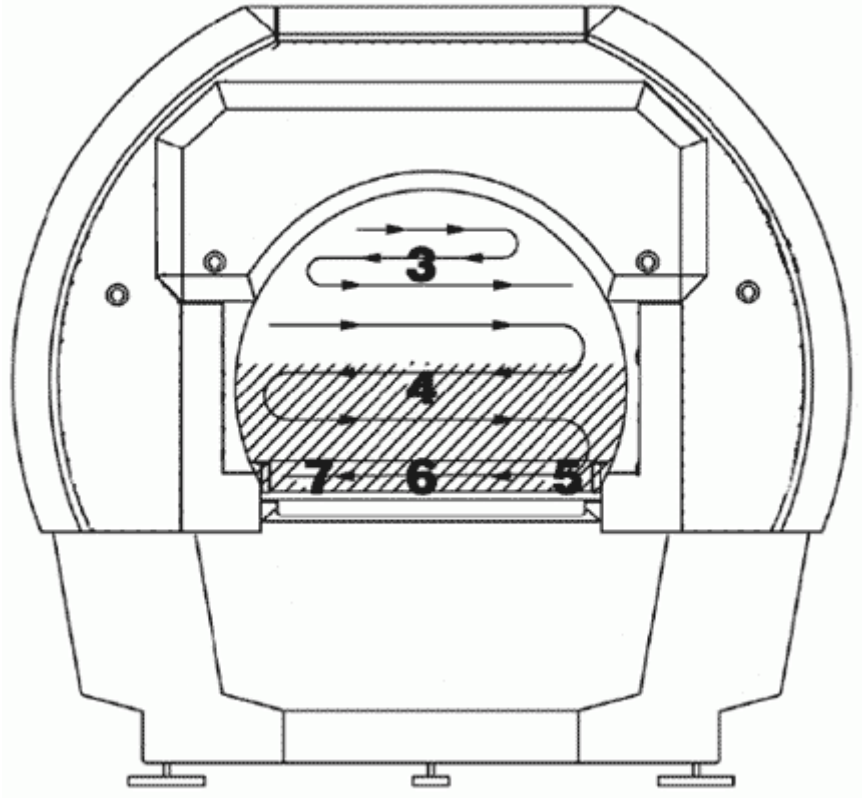


Record the radiation levels as indicated on the table below.

| Area # | 1 | 2 | 3 | 4 | 5 | 6 | 7 |
|---|---|---|---|---|---|---|---|
| Radiation value in uR/Hr | N/A | N/A | 39 | 48 | 39 | 52 | 46 |

[redacted]

*©Copyright 2003-2011, Morpho Detection, Inc. All Rights Reserved.*