Rapiscan systems
An OSI Systems Company

BAGGAGE/PARCEL CABINET X-RAY SYSTEM RADIATION LEAKAGE REPORT

FIELD SERVICE ENGINEERS

Form R-0588-3 9/9/09

45. RSI W.O.# 3780553
Deferred W.O.# ____

1. Name of Facility: Pittsburgh International Airport
2. Region: PA
3. Street Address: 1000 Airport Blvd
4. City: Pittsburgh
5. State or Province Code: PA
6. Zip Code: 15231
7. Room No. or Other Physical Location of System: Main Checkpoint Lane #5
[redacted]
10. Fax Number: [redacted]
11. Manufacture Information & Certification Label Present: ☒ Yes - Pass ☐ No - Fail

FSE Shall Attach Copy of Calibration Certificate to This Form

Model: Inovision Serial No. 00000064 7 Calibration Due Date: 8/19/11

Manufacturer: Rapiscan Systems Inc.

13. System Model No.: 620DVAT
14. Single Source ☐ Dual Source ☒ Other ☐, Describe:
15. System Serial No.: 7083204
16. Date of Manufacture Mo. August Yr. 2008
17. X-ray Tube Serial Number(s): PA658 PA4961
18. Facility Owner Has been notified of responsibility for "Application for Registration" with their State Radiation Control Agency ☒ Yes ☐ No
19. Customer has been notified of their responsibility for posting their State "Notice to Employees" Document and Posted in Several Conspicuous Locations so Employees Can View ☒ Yes ☐ No
20. Operator Instructions Available ☒ Yes - Pass ☐ No - Fail
21. Maintenance Schedule Available ☒ Yes - Pass ☐ No - Fail
22. Warning Label Present at Controls Stating: "Caution: X-Rays Produced When Energized" ☒ Yes - Pass ☐ No - Fail
23. Warning Labels Present at Ports Stating: "Caution: Do Not Insert Any Part of the Body When System is Energized, X-Ray Hazard" ☒ Yes - Pass ☐ No - Fail
24. Two Indicators Labeled "X-Ray On" Present at Controls (including software user interface) ☒ Yes - Pass ☐ No - Fail
25. At Least One Indicator, Marked "X-Ray On" is Visible from Each Port ☒ Yes - Pass ☐ No - Fail
26. Captured Key: The Key for the Key Actuated Control Cannot be Removed in Any Mode that Allows X-Ray Generation ☒ Yes - Pass ☐ No - Fail
27. All Doors and Access Panels To the X-Ray Beam Prevent Generation of X-Radiation ☒ Yes - Pass ☐ No - Fail
28. Some Part of the Body Can Be Inserted Through a Port Into The Primary Beam ☐ Yes ☒ No
29. Use of X-Ray Control Necessary to Resume Operation Following Interruption ☒ Yes ☐ No
30. Means Provided to Ensure Operator Presence at the Control Area X-ray located in a public access area ☒ Yes - Pass ☐ No – Fail
Or X-ray located in a non-public access area ☐ Not Required
Rapiscan Systems Test Procedure Used: Rapiscan Systems WI-0023-4
31. Scatter Block Description: ☒ Two (2) Reams Copy Paper ☐ Other, Describe:
32. Means Provided to Operator for Terminating Exposures of Greater than One-Half Second and Preventing X-rays (E-Stop Test) ☒ Yes - Pass ☐ No - Fail
33. X-Ray Generator Settings: 160.8 kVp .992 mA

Note: All Survey Measurements Shall be Obtained at 5 cm from All External Surfaces and at 5 cm from the Plane of All Access Port Openings or Shroud Extension Openings. Scatter Block shall be Stacked and Positioned Centerline of Primary Beam.

34.1. Background Radiation: 9 uR/hr

Maximum External Surface Dose Rate Not to Exceed 500 uR/hr at 5 cm from all external surfaces.

34.3 Record All Readings in uR/hr Unless Otherwise Noted

Please see model specific diagram (attached)

36. Overall Condition of Lead Drapes: ☒ SAT - Pass ☐ UNSAT- Fail Description
37. Overall Condition of Machine: ☒ SAT – Pass ☐ UNSAT – Fail
38. Comments, Corrective Active Actions and/or Recommendations:
39. Surveyor Name (Print: L. F. MI) [redacted]
40. Surveyor Signature [redacted]
41. Date of Survey: 3/14/11
42. Time of Survey: 9:40 am

The Surveyor has inspected, tested and certified this x-ray machine is in compliance with U.S. FDA 21 CFR 1020.40 and equivalent international radiation emission leakage standards.

[redacted] ation Survey Report and

This report is to certify this x-ray unit has been surveyed for radiation leakage emissions and found to be within the regulatory radiation emission limit. The safety features, controls and indicators incorporated in the x-ray unit have been satisfactorily tested and/or inspected. The owner of this x-ray unit is responsible for State Radiation Control Agency compliance (not applicable for facilities exclusively operated by the Federal Government) and for the safe use and routine inspection, general maintenance and cleanliness of this x-ray unit. Only trained and qualified individuals should operate this equipment.

[redacted]

	MODEL 620DV OR 500 SERIES EQUIVALENT RADIATION LEAKAGE SURVEY FORM	MODEL 620DV FSE SURVEY FORM	FORM FSE-R-0047-620DV-1

FIELD SERVICE ENGINEERS RADIATION EMISSION SURVEY

United States and Canada External Surface Radiation Leakage Limit is 5.0 uSv/hr at 5 cm (500 uR/hr)

Global External Surface Radiation Leakage Limit is 1.0 uSv/hr at 5 cm (100 uR/hr at 5 cm)

Date: 3/14/11	Location Manufactured: (Check One) ___ Malaysia ___ UK ✓ US	Instrument Model No: Inovision 451 P
Time: 9:40 Am	Date of Mfg: Aug. 2008	Instrument Serial No: 0000060471
Background: ___ uSv/hr (9 uR/hr)	Serial No: 7083204	Instrument Calibration Due: 8/19/11
All Measurements Recorded In: ___ uSv/hr ✓ uR/hr (Check One)	Settings: 160.8 kvP .992 mA Settings: 160.8 kvP .992 mA	Description of Scatter Body: (Check One) ✓ Paper (2 Reams, 500 sheets each) ___ Wood Block (4" x 4" x 12" L) ___ Other _____

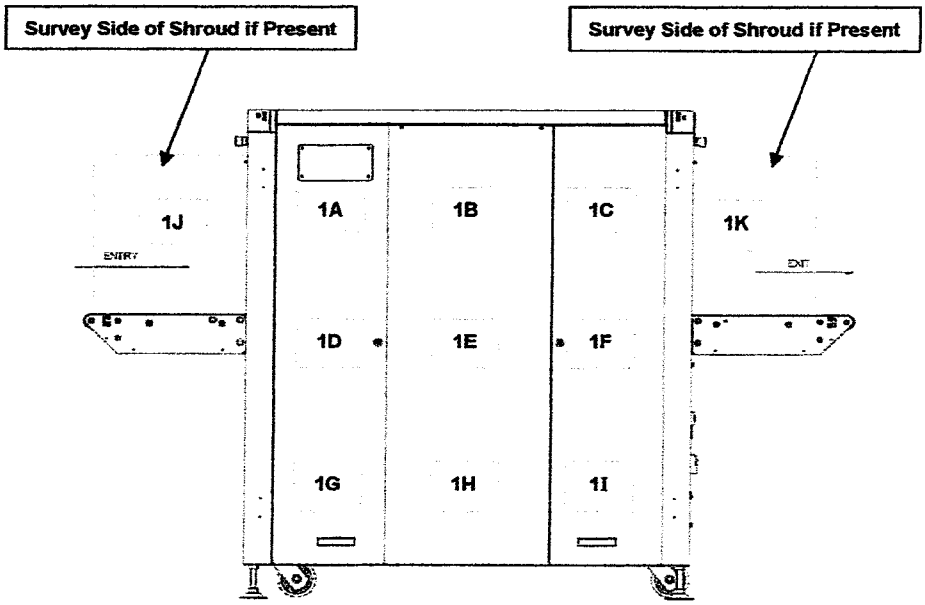

Operators Side

Location	Results NO Scatter Body	Results WITH Scatter Body
1A	19	33
1B	27	31
1C	14	15
1D	21	28
1E	21	27
1F	26	25
1G	20	19
1H	21	26
1I	19	24
1J	86	118
1K	102	96

FIELD SERVICE ENGINEERS RADIATION EMISSION SURVEY

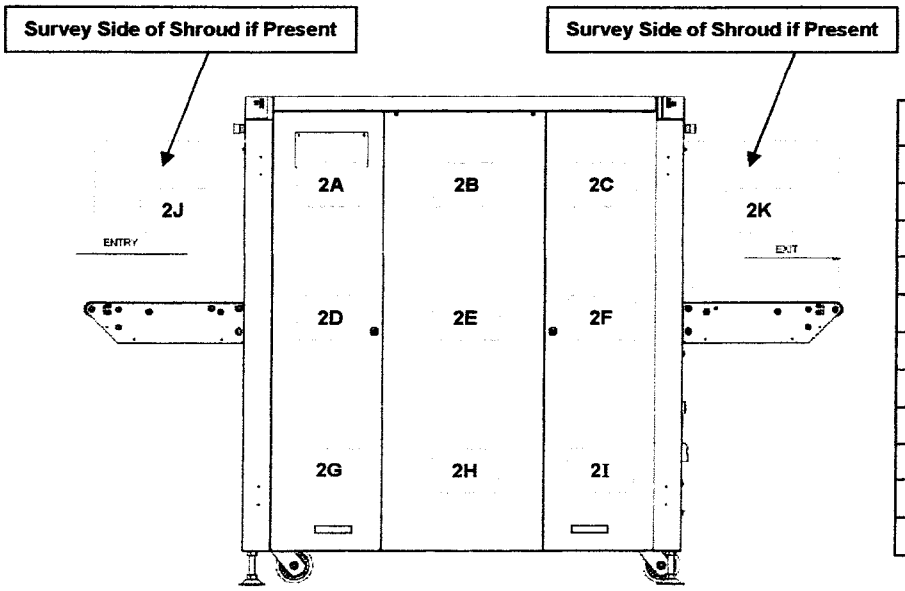

Non-Operators Side

Location	Results NO Scatter Body	Results WITH Scatter Body
2A	15	20
2B	22	23
2C	25	24
2D	24	27
2E	36	42
2F	24	25
2G	18	14
2H	17	17
2I	16	15
2J	56	35
2K	35	66

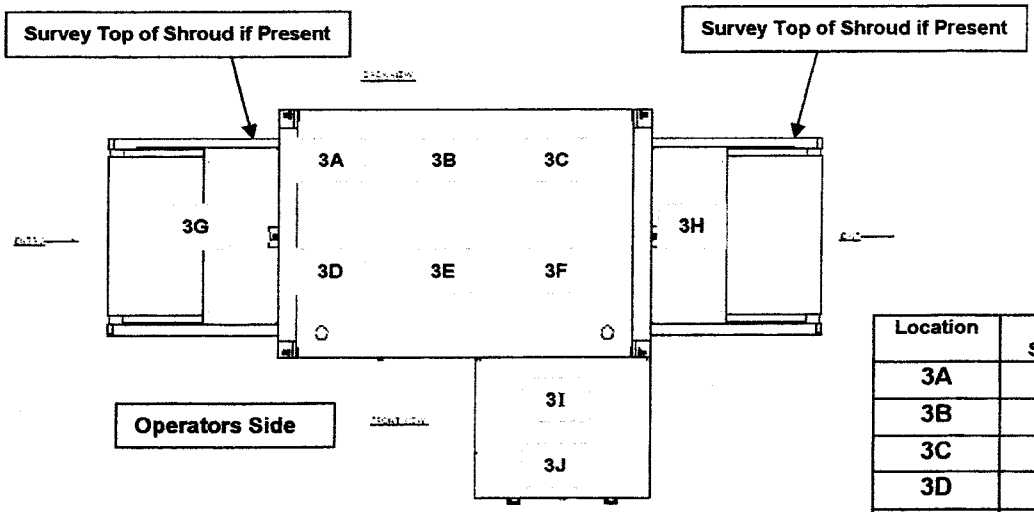

Top View

Location	Results NO Scatter Body	Results WITH Scatter Body
3A	26	29
3B	28	30
3C	23	24
3D	17	23
3E	23	25
3F	16	22
3G	105	111
3H	49	76
3I	30	30
3J	18	19

FIELD SERVICE ENGINEERS RADIATION EMISSION SURVEY

EXIT TUNNEL

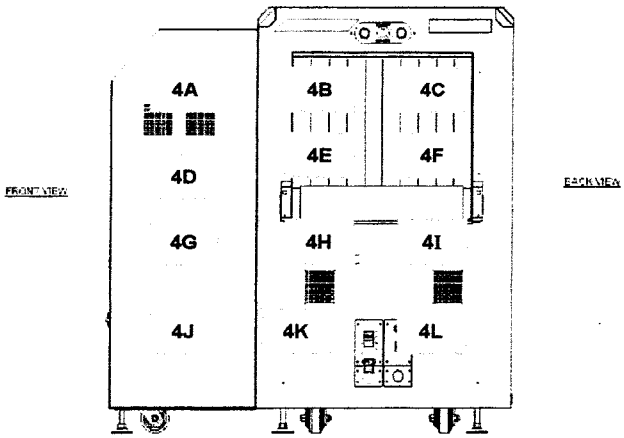

Location	Results NO Scatter Body	Results WITH Scatter Body
4A	19	28
4B	57	71
4C	46	87
4D	27	30
4E	52	82
4F	53	96
4G	25	28
4H	48	54
4I	31	64
4J	17	24
4K	30	44
4L	36	58

ENTRANCE TUNNEL

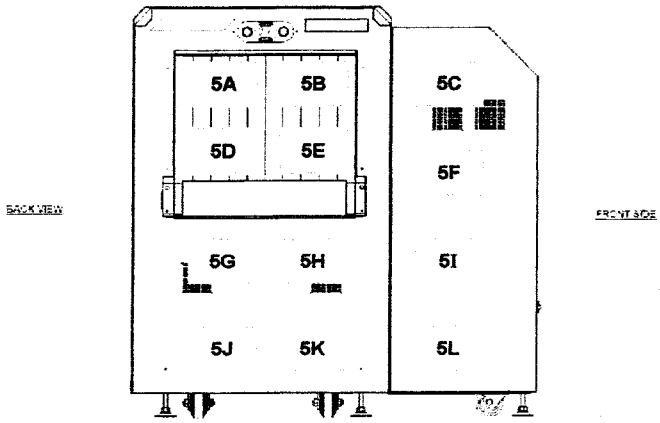

Location	Results NO Scatter Body	Results WITH Scatter Body
5A	51	64
5B	51	77
5C	23	34
5D	50	63
5E	46	78
5F	47	42
5G	41	40
5H	34	26
5I	24	25
5J	36	32
5K	35	27
5L	17	22

Instructions:

- If shrouds are NOT installed, radiation measurements shall be taken 5 cm from the lead drapes.
- If shrouds are installed, radiation measurements shall be taken at the imaginary plane of the shroud opening.
- Lead Drapes should touch the conveyor. If they do not, check to verify x-ray radiation is not traveling down the conveyor where the gap exists between the lead drapes and the conveyor surface.
- Survey below the conveyor up against the cabinet near any gaps, mating surfaces, and photo sensor cut-outs.

SURVEY PERFORMED BY: [redacted] DATE: March 14 2011