Rapiscan systems	BAGGAGE/PARCEL CABINET X-RAY SYSTEM RADIATION LEAKAGE REPORT	FIELD SERVICE ENGINEERS	Form R-0588-3 9/9/09 45. RSI W.O.# 3285890 Deferred W.O.#

1. Name of Facility: Pittsburgh International Airport	2. Region: PA	3. Street Address: 1000 Airport Blvd.	
4. City: Pittsburgh		5. State or Province Code: PA	6. Zip Code: 15231
7. Room No. or Other Physical Location of System: Main Checkpoint Lane #3	8. Person Interviewed: [redacted]	9. Telephone Number: [redacted]	10. Fax Number: [redacted]
11. Manufacture Information & Certification Label Present ☑ Yes - Pass ☐ No - Fail	12. Radiation Measuring Instrument: FSE Shall Attach Copy of Calibration Certificate to This Form Model: Inovision 451P Serial No. 471 Calibration Due Date: 8-19-2011		
Manufacturer: Rapiscan Systems Inc.	13. System Model No.: 620 DVAT	14. Single Source ☐ Dual Source ☑ Other ☐, Describe:	15. System Serial No.: 7090508
16. Date of Manufacture Mo. Yr.: February 2009	18. Facility Owner Has been notified of responsibility for "Application for Registration" with their State Radiation Control Agency ☑ Yes ☐ No	19. Customer has been notified of their responsibility for posting their State "Notice to Employees" Document and Posted in Several Conspicuous Locations so Employees Can View ☑ Yes ☐ No	
17. X-ray Tube Serial Number(s): PA810 PG817	20. Operator Instructions Available ☑ Yes - Pass ☐ No - Fail	21. Maintenance Schedule Available ☑ Yes - Pass ☐ No - Fail	
22. Warning Label Present at Controls Stating: "Caution: X-Rays Produced When Energized" ☑ Yes - Pass ☐ No - Fail	23. Warning Labels Present at Ports Stating: "Caution: Do Not Insert Any Part of the Body When System is Energized, X-Ray Hazard" ☑ Yes - Pass ☐ No - Fail	24. Two Indicators Labeled "X-Ray On" Present at Controls (including software user interface) ☑ Yes - Pass ☐ No - Fail	
25. At Least One Indicator, Marked "X-Ray On" is Visible from Each Port ☑ Yes - Pass ☐ No - Fail	26. Captured Key: The Key for the Key Actuated Control Cannot be Removed in Any Mode that Allows X-Ray Generation ☑ Yes - Pass ☐ No - Fail		
27. All Doors and Access Panels To the X-Ray Beam Prevent Generation of X-Radiation ☑ Yes - Pass ☐ No - Fail	28. Some Part of the Body Can Be Inserted Through a Port Into The Primary Beam ☐ Yes ☑ No		
29. Use of X-Ray Control Necessary to Resume Operation Following Interruption ☑ Yes ☐ No	30. Means Provided to Ensure Operator Presence at the Control Area X-ray located in a public access area ☑ Yes - Pass ☐ No – Fail Or X-ray located in a non-public access area ☐ Not Required		
Rapiscan Systems Test Procedure Used: Rapiscan Systems WI-0023-4	31. Scatter Block Description: ☑ Two (2) Reams Copy Paper ☐ Other, Describe:	32. Means Provided to Operator for Terminating Exposures of Greater than One-Half Second and Preventing X-rays (E-Stop Test) ☑ Yes - Pass ☐ No - Fail	
33. X-Ray Generator Settings: 160.8 kVp 1.007 mA	Note: All Survey Measurements Shall be Obtained at 5 cm from All External Surfaces and at 5 cm from the Plane of All Access Port Openings or Shroud Extension Openings. Scatter Block shall be Stacked and Positioned Centerline of Primary Beam.		
34.1. Background Radiation: 8 uR/hr	–	**Maximum External Surface Dose Rate Not to Exceed 500 uR/hr at 5 cm from all external surfaces.**	

34.3 Record All Readings in uR/hr Unless Otherwise Noted

Please see model specific diagram (attached)

36. Overall Condition of Lead Drapes: ☑ SAT - Pass ☐ UNSAT- Fail Description	37. Overall Condition of Machine: ☑ SAT – Pass ☐ UNSAT – Fail	38. Comments, Corrective Active Actions and/or Recommendations:

39. Surveyor Name (Print: L. F. M) [redacted]	40. Surveyor Signature [redacted]	41. Date of Survey: March 14, 2011	42. Time of Survey: 15:00

The Surveyor has inspected, tested and certified this x-ray machine is in compliance with U.S. FDA 21 CFR 1020.40 and equivalent international radiation emission leakage standards.	43. I [redacted]) have received a copy of this Radiation Survey Report and understand the responsibility to retain this report for State inspection. Signature [redacted] Date 3/16/11

This report is to certify this x-ray unit has been surveyed for radiation leakage emissions and found to be within the regulatory radiation emission limit. The safety features, controls and indicators incorporated in the x-ray unit have been satisfactorily tested and/or inspected. The owner of this x-ray unit is responsible for State Radiation Control Agency compliance (not applicable for facilities exclusively operated by the Federal Government) and for the safe use and routine inspection, general maintenance and cleanliness of this x-ray unit. Only trained and qualified individuals should operate this equipment.

[redacted]

Rapiscan Systems	MODEL 620DV OR 600 SERIES EQUIVALENT RADIATION LEAKAGE SURVEY FORM	MODEL 620DV FSE SURVEY FORM	FORM FSE-R-0047-620DV-1

FIELD SERVICE ENGINEERS RADIATION EMISSION SURVEY

United States and Canada External Surface Radiation Leakage Limit is 5.0 uSv/hr at 5 cm (500 uR/hr)

Global External Surface Radiation Leakage Limit is 1.0 uSv/hr at 5 cm (100 uR/hr at 5 cm)

Date: March 14, 2011	Location Manufactured: (Check One) ___ Malaysia ___ UK ✓ US	Instrument Model No: Inovision 451P
Time: 15:00	Date of Mfg: Feb 2009	Instrument Serial No: 0000000471
Background: ___ uSv/hr (8 uR/hr)	Serial No: 7090508	Instrument Calibration Due: 8-19-2011
All Measurements Recorded In: ___ uSv/hr ✓ uR/hr (Check One)	Settings: 160.8 kvP 1.007 mA Settings: 160.8 kvP 1.007 mA	Description of Scatter Body: (Check One) ✓ Paper (2 Reams, 500 sheets each) ___ Wood Block (4" x 4" x 12" L) ___ Other ___

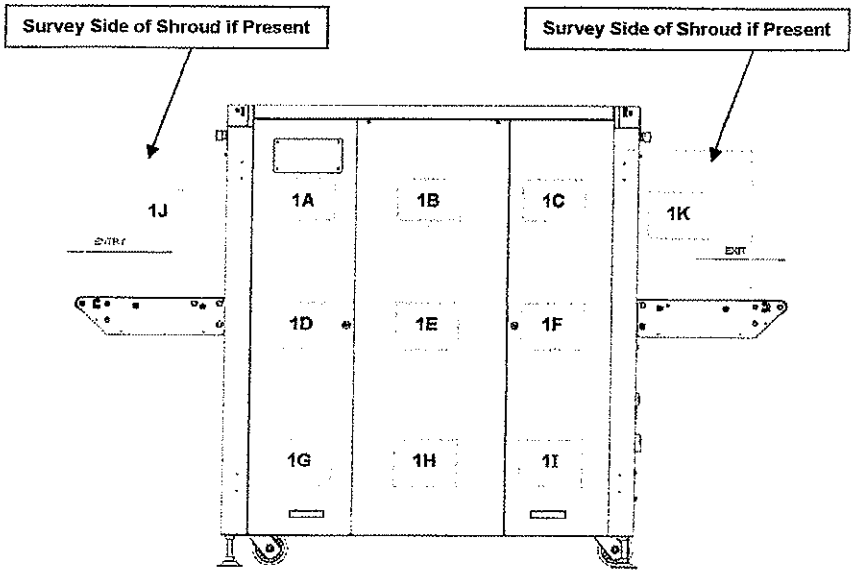

Operators Side

Location	Results NO Scatter Body	Results WITH Scatter Body
1A	23	28
1B	21	31
1C	19	25
1D	17	18
1E	23	27
1F	20	21
1G	22	23
1H	20	36
1I	15	18
1J	94	123
1K	98	113

PA810

FIELD SERVICE ENGINEERS RADIATION EMISSION SURVEY

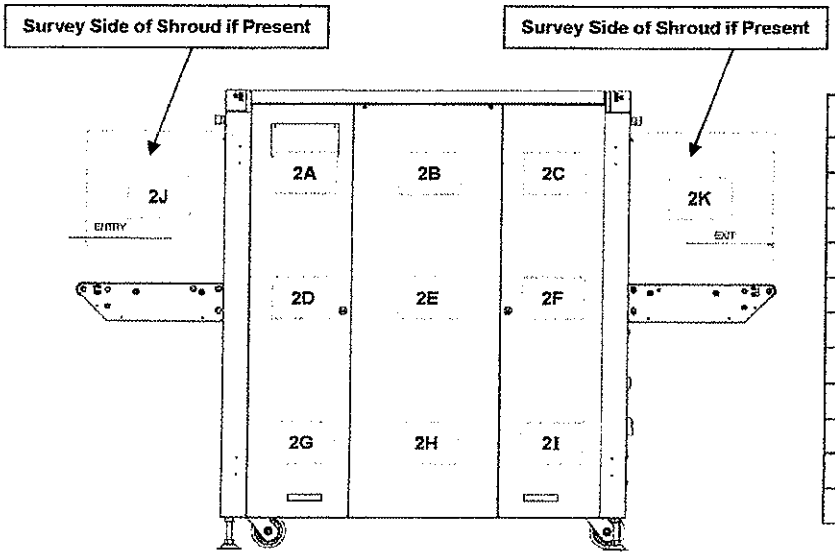

Non-Operators Side

Location	Results NO Scatter Body	Results WITH Scatter Body
2A	18	24
2B	24	38
2C	22	24
2D	21	20
2E	29	32
2F	18	16
2G	16	14
2H	17	18
2I	19	17
2J	31	64
2K	54	64

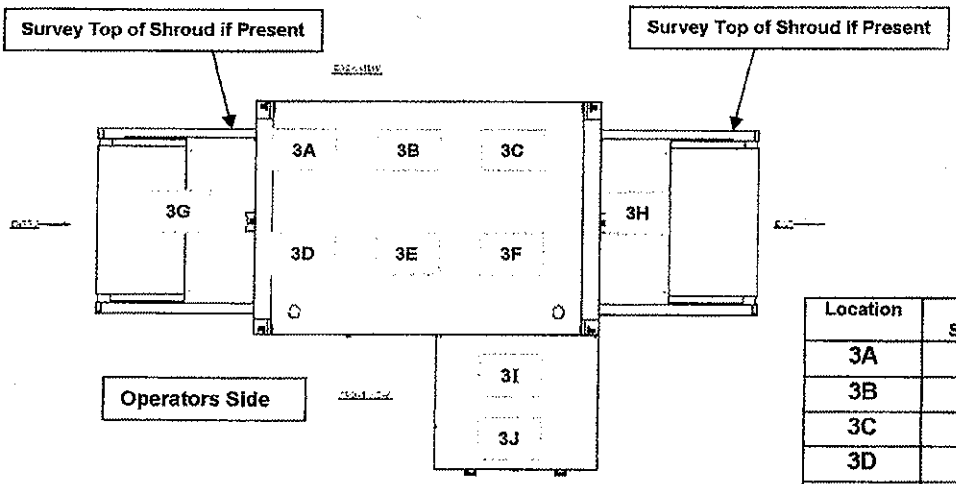

Top View

Location	Results NO Scatter Body	Results WITH Scatter Body
3A	26	29
3B	20	27
3C	28	30
3D	16	20
3E	22	27
3F	28	30
3G	109	138
3H	46	143
3I	38	24
3J	28	22

FIELD SERVICE ENGINEERS RADIATION EMISSION SURVEY

EXIT TUNNEL

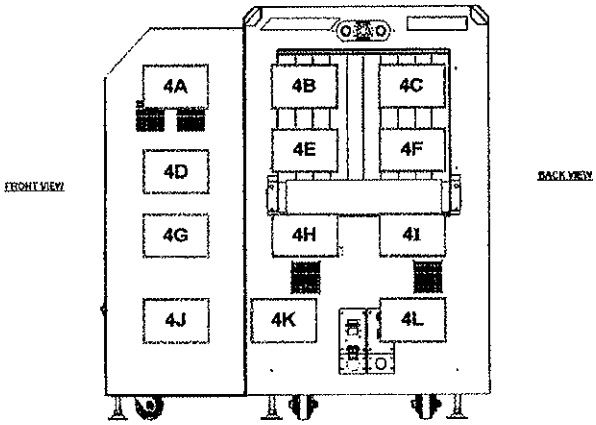

Location	Results NO Scatter Body	Results WITH Scatter Body
4A	30	34
4B	52	87
4C	60	96
4D	24	31
4E	55	95
4F	57	88
4G	24	28
4H	24	73
4I	23	68
4J	17	22
4K	18	37
4L	19	51

ENTRANCE TUNNEL

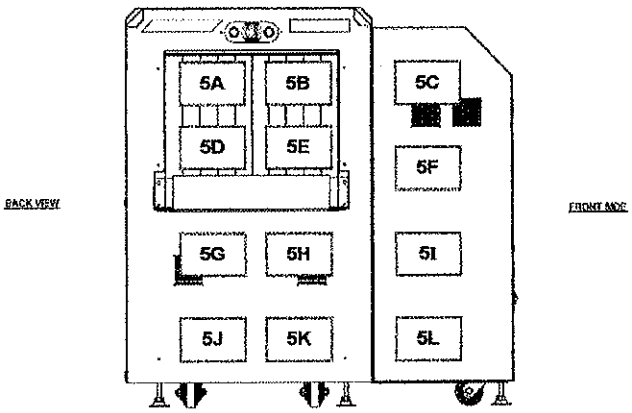

Location	Results NO Scatter Body	Results WITH Scatter Body
5A	61	97
5B	45	113
5C	27	34
5D	73	94
5E	47	110
5F	47	53
5G	32	31
5H	47	29
5I	27	35
5J	23	25
5K	30	21
5L	22	24

Instructions:

- If shrouds are NOT installed, radiation measurements shall be taken 5 cm from the lead drapes.
- If shrouds are installed, radiation measurements shall be taken at the imaginary plane of the shroud opening.
- Lead Drapes should touch the conveyor. If they do not, check to verify x-ray radiation is not traveling down the conveyor where the gap exists between the lead drapes and the conveyor surface.
- Survey below the conveyor up against the cabinet near any gaps, mating surfaces, and photo sensor cut-outs.

SURVEY PERFORMED BY: [redacted] DATE: March 14, 2011